# PRODUCT CATALOGUE

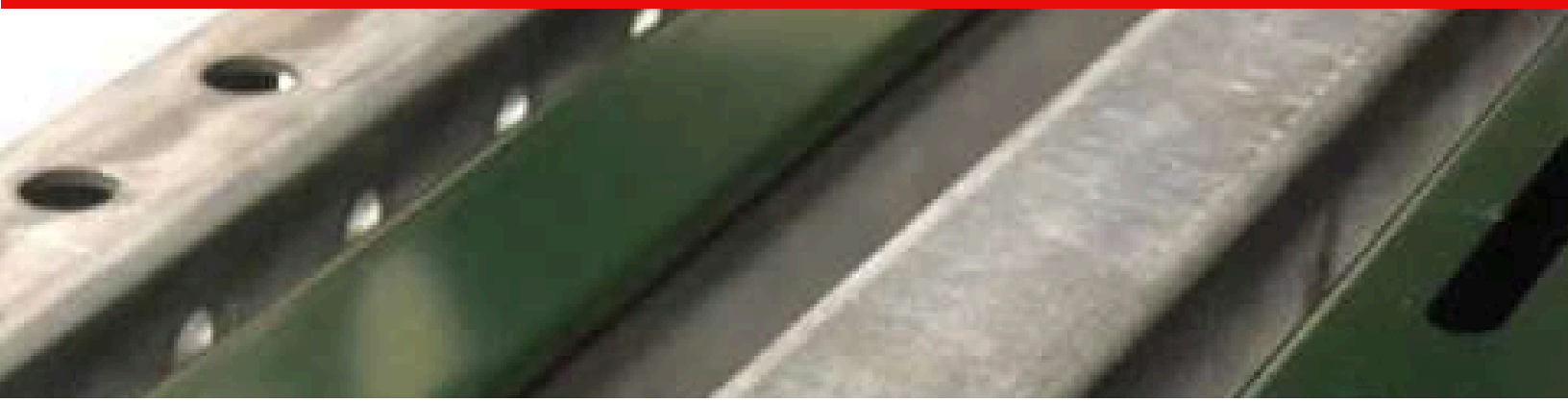

# TECHNISTRUT

## STRUT PRODUCTS

MANUFACTURING YOUR SUCCESS

V.2.5

# TECHNISTRUT - WHO WE ARE

**Our Mission:**
Providing high-quality Canadian made products that enhance each project they are a part of.

**Our Vision:**
Our vision at Technistrut is to empower builders, engineers, and local communities by providing reliable strut and strut fitting solutions. We do this by using high-quality Canadian sourced, and Canadian made metals while closely collaborating with our clients to fulfill each of their unique needs. Technistrut offers an extensive line of products, operates with a customer-first attitude, and has short turnaround times, which gives us the advantage we need to help our clients succeed.

**Technistrut Ethos:**
At Technistrut we believe in genuine service and taking ownership of what we do. We refuse to compromise on quality and strive to provide world-class levels of customer service. Our foundation is built on clear communication, flexibility, and continual improvement philosophies.

**What do we offer?**
We take pride in offering a comprehensive line of products that can meet the diverse needs of our customers. From standard strut fittings to specialized components we provide a wide range of Canadian made high-quality products designed to enhance structural support across a wide range of applications. Our catalogue includes a variety of strut fittings, brackets, post bases, strut clamps, pipe clips, pipe straps, washers etc. that are built to meet or exceed industry standards.

Moreover, we offer custom fabrication services, allowing us to create tailored products that are built to satisfy the unique needs of all our clients. Whether it is a specific size, thickness, hole size, spacing, material, or finish our team is dedicated to delivering what you need, how you need it.

**Want to get in touch?**
Lets talk about what Technistrut can do for you!

**Phone**: (519)-698-9856
**Email**: sales@technistrut.ca
**Website**: www.technistrut.ca

**TECHNISTRUT MFG INC.**
**4145 LAWSON LINE**
**WALLENSTEIN, ON N0B 2S0**

**Scan to visit our website!**

TECHNISTRUT
STRUT PRODUCTS

# OUR MANUFACTURING

## Our Products

**Channels**
Our strut channels are cold-formed from locally sourced low-carbon steel. We offer various profiles & weld configurations for your varying project needs. Standard sizes are 10' and 20', custom cutting is available upon request.

**Strut Fittings**
Technistrut began as a strut fitting manufacturer. All of our fittings are made in our shop using hot-rolled pickled and oil steel, and sent to local finishers for zinc plating, or hot-dipped galvanizing. Most of our fittings are also available in stainless steel, 316 and 304, as well as aluminum.

**Spring Nuts & Hardware**
We stock various spring nuts in different finishes. As well as a large catalogue of bolts, set screws, and nuts that are common with strut channel and fitting assembly.

## Standard Finishes

**Hot Dipped Galvanized (HG)**
We locally hot dip galvanize after fabrication to conform with ASTM A123.

**Electroplated Zinc (ZC)**
Parts are electroplated to conform with ASTM B633 Type III SC1.

**Pre-Galvanized (PG)**
Steel sheet is coated with zinc using a hot dip process. The minimum weight of zinc is G90 under general requirements of ASTM A653

**Plain (P)**
Steel has light coating of oil.

**Stainless Steel (SS4 or SS6)**
We make to order most products in Stainless Steel Type 316 or 304

**Aluminum (AL)**
We make to order most strut fittings with Aluminum (6063),

# TABLE OF CONTENTS


Strut Channel ..... 5-9

T1000: Washers ..... 10-12

T2000: Pipe & Conduit Supports ..... 13-16

T3000: General Fittings ..... 17-30

T4000: Clamping Nuts ..... 31

T5000: Hardware ..... 32-33

T6000: Miscellaneous ..... 34

T7000: Post Bases ..... 35-36

T8000: Beam Clamps ..... 37-43

T9000: Brackets and Braces ..... 44-48

# Strut Channel: Single Channel

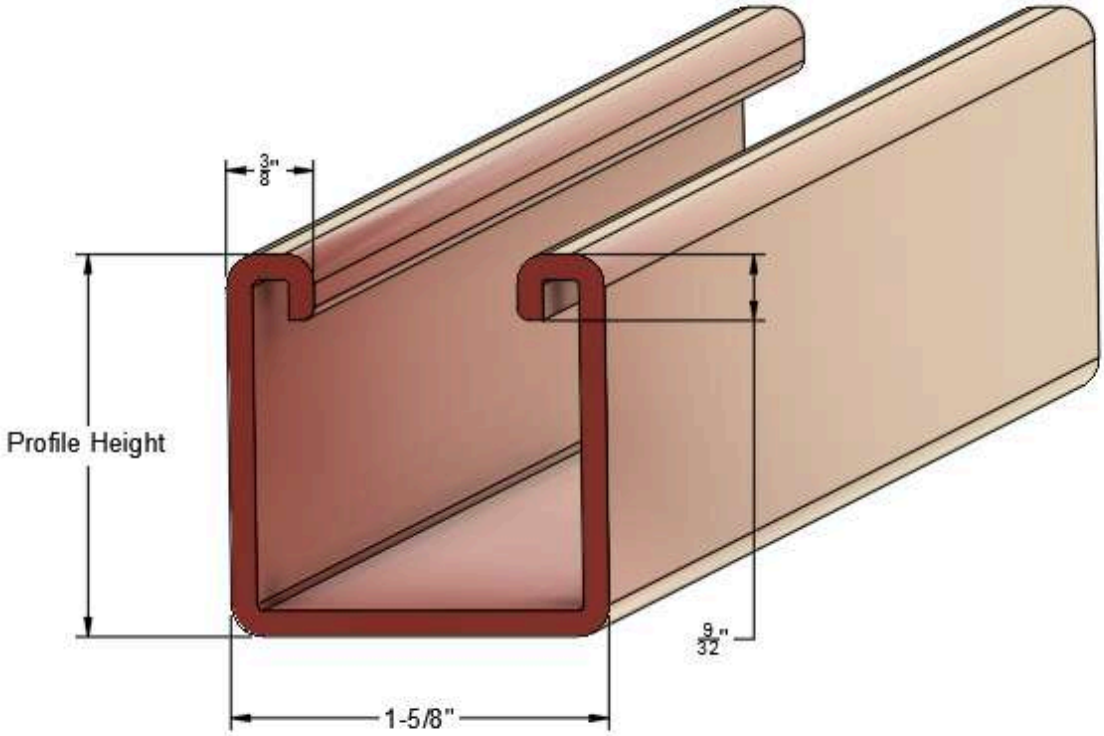


## Part Number Identifier (Profile Height and Gauge)

| | 13/16" | 1" | 1-5/8" | 2-7/16" | 3-1/4" |
|---|---|---|---|---|---|
| 12 ga. | | T50 | T20 | T10 | T90* |

* Profile not yet in production, due late 2027

**Available Finishes:**
Plain (P), Pre-Galvanized (PG), Hot-Dipped Galvanized (H)

Example part numbers with channel profile highlighted
**T20SL** **T50P.20** **T10SLH**

The specifications in this document are for reference only and subject to change without prior notice

TECHNISTRUT STRUT PRODUCTS

# Strut Channel: Combinations (Back to Back)

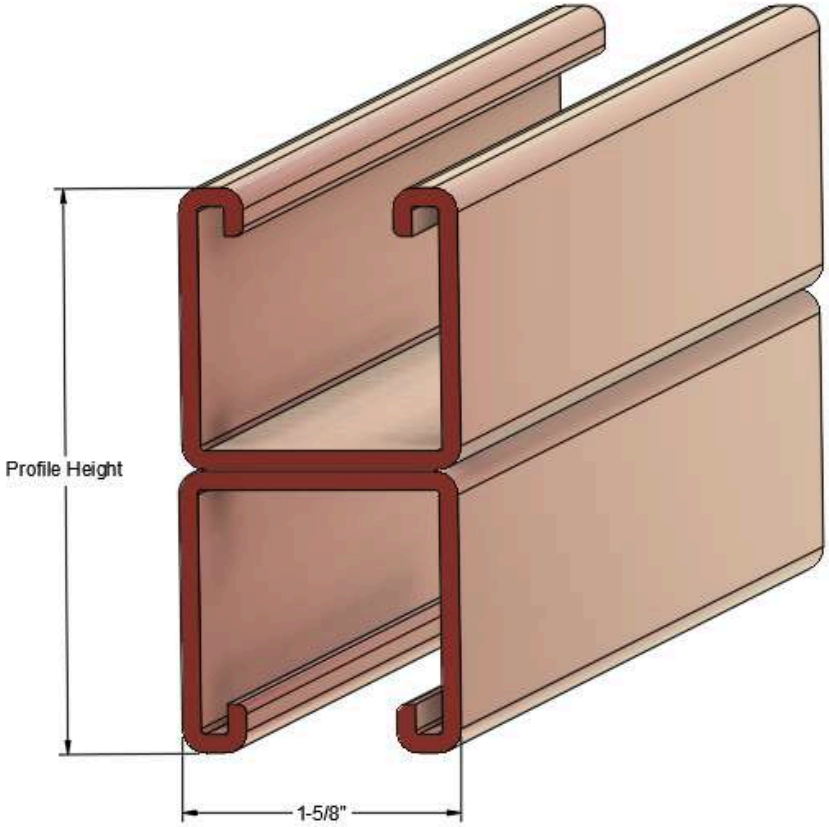


## Part Number Identifier (Profile Height and Gauge)

| | 1-7/8" | 2" | 3-1/4" | 4-7/8" | 6-1/2" |
|---|---|---|---|---|---|
| 12 ga. | | T50BB | T20BB | T10BB | T90BB* |

* Profile not yet in production, due late 2027

**Available Finishes:**

Plain (P), Pre-Galvanized (PG), Hot-Dipped Galvanized (H)

Example part numbers with channel profile highlighted

**T20BBSL** **T50BBP.20** **T10BBSLH**

The specifications in this document are for reference only and subject to change without prior notice

TECHNISTRUT STRUT PRODUCTS

# Strut Channel: Pre-Punched Pattern

## Slots and Holes

Technistrut's slotted channels allow for various mounting and suspension applications; such as wall mounting and constructing trapeze supports. At Technistrut, we also have the ability to create **custom slots** as well, both for mass production, or small batch jobs. Contact us today for a consultation.

### SL

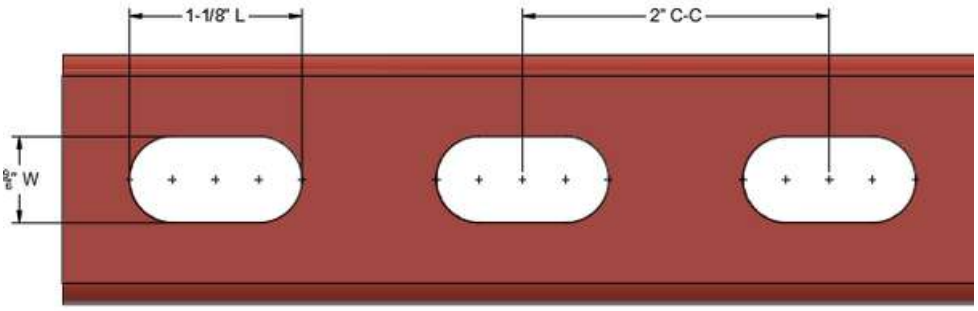


### LS

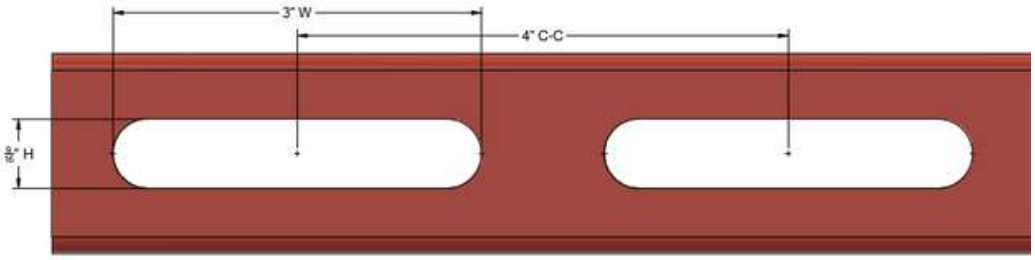


### HS

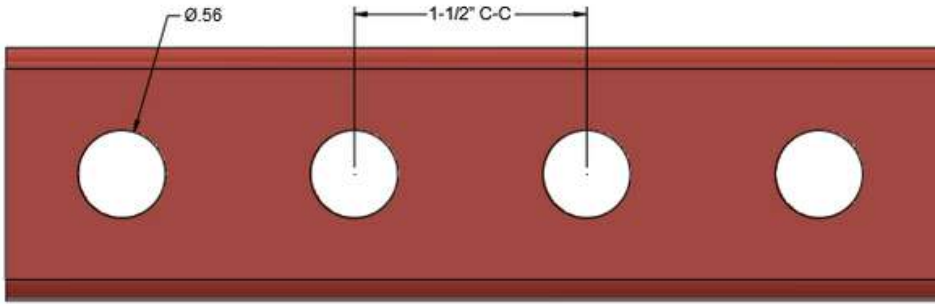


Example part numbers with slots highlighted

**T20SL** **T50HSP.20** **T10LSH**

The specifications in this document are for reference only and subject to change without prior notice

TECHNISTRUT STRUT PRODUCTS

# Strut Combination: Other

## Weld Combinations

These welded combinations are made to order. Available in pre-galvanized (spot welding only), electroplating zinc (ZC), hot dip galvanized (H), and plain steel (P), as well as stainless steel types 304 (SS4) and 316 (SS6).

**Back to Side (BS)**

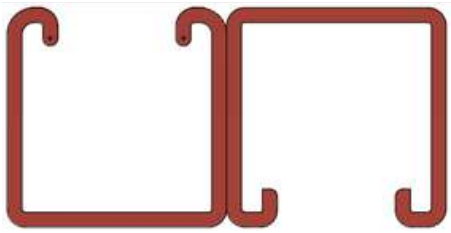

Spot Welded on 3" Centres

**Side to Side (SS)**

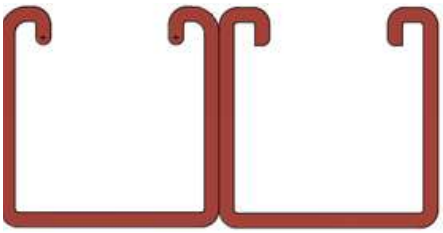

1" Seam Weld on 6" Centres

**One-Up-One-Down (UN)**

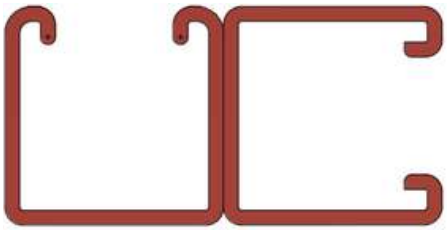

1" Seam Weld on 6" Centres

For triple and other combinations of welded strut, please contact us for custom pricing and lead time.

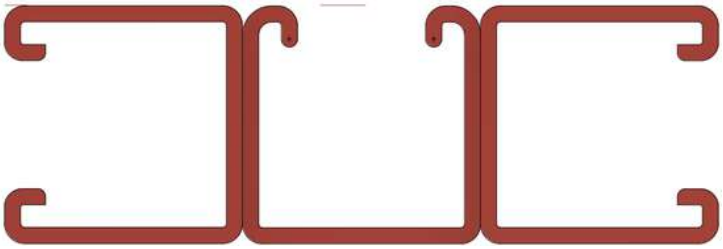

Example part numbers with weld combinations highlighted

**T20BB** **T50BS.20** **T10SSSS6**

# Strut Channel: Finishes/Materials & Length

Technistrut Channels are roll formed from 33,000 psi steel. Steel MTR's are available upon request. Special coatings (powder coating, paint) can be supplied. Please contact us for availability.

**Pre-Galvanized Steel**

The standard material for our channels. Steel sheet is coated with zinc prior to manufacturing. The minimum weight of zinc is G90 under the general requirements of ASTM A653 (G90)

- As it is the standard finish, there is no identifier in our part number nomenclature, (ex. T20 would specify a pre-galvanized channel).

**Hot-Dipped Galvanized Steel**

Channels and fittings are hot-dip galvanized after fabrication and conform to ASTM A123.

- Use **-H** in a part number to specify hot dip galvanized finish on strut channel.

**Plain Steel**

Pickled and oiled steel (P&O) has a slight surface coating of oil from the mill.

- Use **-P** in part number to specify plain steel finish.

**Stainless Steel (Coming Late 2027)**

Coming late 2027, Technistrut will roll both type 316 and 304 stainless channels.

- Use **-SS6** for type 316 stainless steel.
- Use **-SS4** for type 304 stainless steel.

## Lengths

Standard lengths are 10 ft. and 20ft. Please specify lengths when ordering, custom lengths are available upon request.

- 10' being standard does not have a part identifier.
- When ordering 20' please use **.20** at the end.

Example part numbers with finish highlighted

**T20P** **T50SS6.20** **T10BBH**

# T1000: WASHERS

## Washer Product Variables

**Available Materials:**

- **Mild Steel (44W/50W/A36)**
- **Stainless Steel - Type 304 (SS4) or 316 (SS)**
  - **Example: T1001-SS4 or T1001-SS**

**Available Finishes / Part Number Suffix (-XX):**

- **Hot Dipped Galvanized (-HG)**
  - **Example: T1001-HG**
- **Zinc / Electro-Galvanized (-ZC)**
  - **Example: T1001-ZC**
- **Pre-Galvanized (-PG)**
  - **Example: T1001-PG**

**Note:**
**Custom hole sizing and dimensions can be made to order - please contact for more details.**

# T1000: WASHERS

## Strut Washer

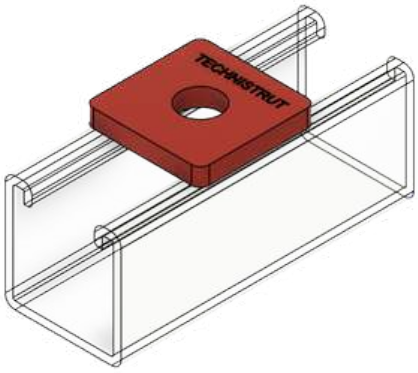


| Part # | Bolt Size | Hole Size |
|---|---|---|
| T1011 | 1/4" | 5/16" |
| T1012 | 3/8" | 7/16" |
| T1013 | 1/2" | 9/16" |
| T1014 | 5/8" | 11/16" |
| T1015 | 3/4" | 13/16" |
| T1016 | 7/8" | 15/16" |

## No-Twist Strut Washer

| Part # | Bolt Size | Hole Size |
|---|---|---|
| T1201 | 1/4" | 5/16" |
| T1208 | 5/16" | 3/8" |
| T1202 | 3/8" | 7/16" |
| T1203 | 1/2" | 9/16" |
| T1204 | 5/8" | 11/16" |
| T1205 | 3/4" | 13/16" |

# T1000: WASHERS

## Square Washers

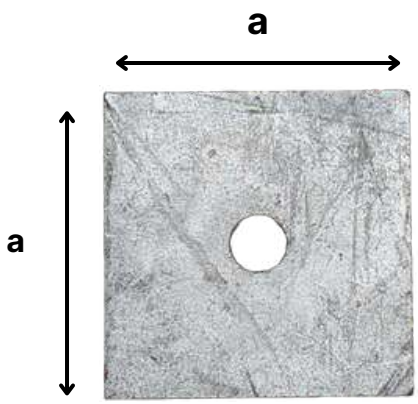


| Part # | Size a (in.) | Bolt Size | Hole Size |
|---|---|---|---|
| T1122 | 2" | 3/8" | 7/16" |
| T1123 | 2" | 1/2" | 9/16" |
| T1124 | 2" | 5/8" | 11/16" |
| T1125 | 2" | 3/4" | 13/16" |
| T1132 | 3" | 3/8" | 7/16" |
| T1133 | 3" | 1/2" | 9/16" |
| T1134 | 3" | 5/8" | 11/16" |
| T1135 | 3" | 3/4" | 13/16" |
| T1142 | 4" | 3/8" | 7/16" |
| T1143 | 4" | 1/2" | 9/16" |
| T1144 | 4" | 5/8" | 11/16" |
| T1145 | 4" | 3/4" | 13/16" |

**Custom sizes available upon request**

## Strut U-Washer

| Part # | Bolt Size | Hole Size |
|---|---|---|
| T1302 | 3/8" | 7/16" |
| T1303 | 1/2" | 9/16" |
| T1304 | 5/8" | 11/16" |
| T1305 | 3/4" | 13/16" |

The specifications in this document are for reference only and subject to change without prior notice

## Pipe & Conduit Support Variables

**Available Materials:**

- **Mild Steel (44W/50W/A36/A1011)**
- **Stainless Steel - Type 304 (SS4) or 316 (SS)**
  - **Example: T2001-SS4 or T2001-SS**
- **Aluminum (-AL)**
  - **Example: T2001-AL**

**Available Finishes / Part Number Suffix (-XX):**

- **Hot Dipped Galvanized (-HG)**
  - **Example: T1001-HG**
- **Zinc / Electro-Galvanized (-ZC)**
  - **Example: T1001-ZC**
- **Pre-Galvanized (-PG)**
  - **Example: T1001-PG**

**Supports**

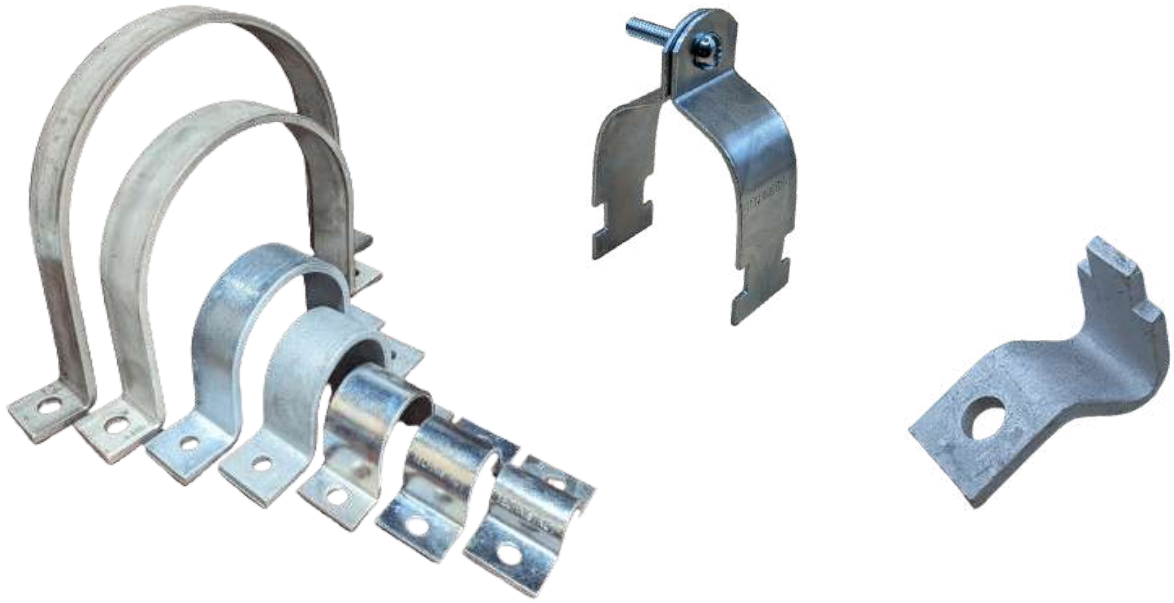

# T2000: PIPE & CONDUIT SUPPORTS

## Strut Clamps - Rigid (T2000-T2008)

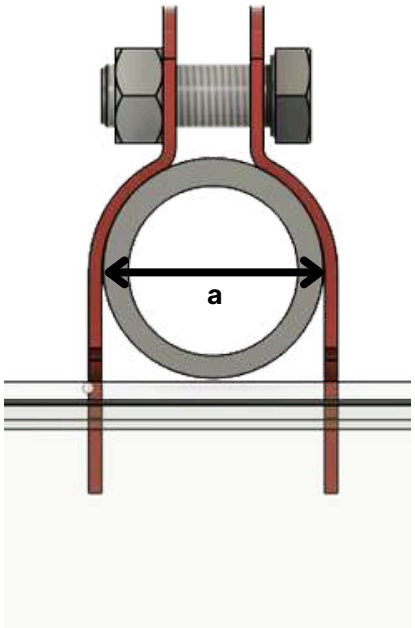


| Part # | Gauge | Rigid Pipe Size | Outside Diameter (a) | Bolt Size | Load Capacity (Lbs) |
|---|---|---|---|---|---|
| T2000-1/2 | 14G | 1/2" | 0.84" | 1/4" x 3/4" | 400 |
| T2000-3/4 | 14G | 3/4" | 1.05" | 1/4" x 3/4" | 600 |
| T2001 | 14G | 1" | 1.315" | 1/4" x 1" | 600 |
| T2001-1/4 | 14G | 1-1/4" | 1.66" | 1/4" x 1" | 600 |
| T2001-1/2 | 14G | 1-1/2" | 1.9" | 1/4" x 1" | 800 |
| T2002 | 12G | 2" | 2.375" | 1/4" x 1" | 800 |
| T2002-1/2 | 12G | 2-1/2" | 2.875" | 1/4" x 1" | 800 |
| T2003 | 12G | 3" | 3.5" | 5/16" x 1-1/4" | 800 |
| T2003-1/2 | 12G | 3-1/2" | 4" | 5/16" x 1-1/4" | 1000 |
| T2004 | 12G | 4" | 4.5" | 5/16" x 1-1/4" | 1000 |
| T2005 | 12G | 5" | 5.563" | 5/16" x 1-1/2" | 1000 |
| T2006 | 10G | 6" | 6.625" | 5/16" x 1-1/2" | 1000 |
| T2008 | 10G | 8" | 8.625" | 5/16" x 1-1/2" | 1000 |
| T2000-10 | 10G | 10" | 10.75" | 5/16" x 1-1/2" | 1000 |
| T2000-12 | 10G | 12" | 12.75" | 5/16" x 1-1/2" | 1000 |

## Strut Clamps - Thin Wall (T2010-2012)

| Part # | Gauge | EMT Pipe Size | Outside Diameter (a) | Bolt Size | Load Capacity (Lbs) |
|---|---|---|---|---|---|
| T2010-1/2 | 14G | 1/2" | 0.688" | 1/4" x 3/4" | 400 |
| T2010-3/4 | 14G | 3/4" | 0.938" | 1/4" x 3/4" | 600 |
| T2011 | 14G | 1" | 1.188" | 1/4" x 1" | 600 |
| T2011-1/4 | 14G | 1-1/4" | 1.5" | 1/4" x 1" | 600 |
| T2011-1/2 | 12G | 1-1/2" | 1.75" | 1/4" x 1" | 800 |
| T2012 | 12G | 2" | 2.25" | 1/4" x 1" | 800 |

The specifications in this document are for reference only and subject to change without prior notice

# T2000: PIPE & CONDUIT SUPPORTS

## Strut Clamps - O.D. (T2020-2028)

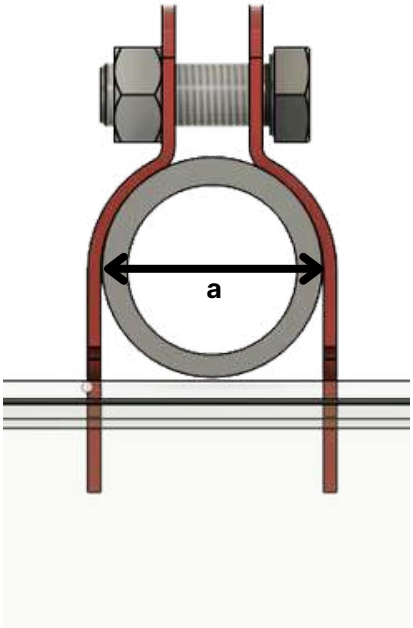


| Part # | Gauge | Outside Diameter (a) | Bolt Size | Load Capacity (Lbs) |
|---|---|---|---|---|
| T2020-3/8 | 14G | 0.375" | 1/4" x 3/4" | 400 |
| T2020-1/2 | 14G | 0.5" | 1/4" x 3/4" | 400 |
| T2020-5/8 | 14G | 0.625" | 1/4" x 3/4" | 400 |
| T2020-3/4 | 14G | 0.75" | 1/4" x 3/4" | 400 |
| T2020-7/8 | 14G | 0.875" | 1/4" x 3/4" | 400 |
| T2021 | 14G | 1" | 1/4" x 3/4" | 600 |
| T2021-1/4 | 14G | 1.25" | 1/4" x 1" | 600 |
| T2021-3/8 | 14G | 1.375" | 1/4" x 1" | 600 |
| T2022 | 12G | 2" | 1/4" x 1" | 600 |
| T2022-1/8 | 12G | 2.125" | 1/4" x 1" | 800 |
| T2022-1/4 | 12G | 2.25" | 1/4" x 1" | 800 |
| T2022-1/2 | 12G | 2.5" | 1/4" x 1" | 800 |
| T2023 | 12G | 3" | 1/4" x 1" | 800 |
| T2023-1/8 | 12G | 3.125" | 1/4" x 1" | 800 |
| T2023-1/4 | 12G | 3.25" | 1/4" x 1" | 800 |
| T2023-1/2 | 12G | 3.5" | 5/16" x 1-1/4" | 800 |
| T2023-5/8 | 12G | 3.625" | 5/16" x 1-1/4" | 1000 |
| T2024 | 12G | 4" | 5/16" x 1-1/4" | 1000 |
| T2024-3/8 | 12G | 4.375" | 5/16" x 1-1/4" | 1000 |
| T2024-1/2 | 12G | 4.5" | 5/16" x 1-1/4" | 1000 |
| T2025 | 12G | 5" | 5/16" x 1-1/4" | 1000 |
| T2026 | 10G | 6" | 5/16" x 1-1/2" | 1000 |
| T2027 | 10G | 7" | 5/16" x 1-1/2" | 1000 |

**Sizes listed do not reflect all of our O.D. sizing. Contact us for price and availability**

The specifications in this document are for reference only and subject to change without prior notice

# T2000: PIPE & CONDUIT SUPPORTS

## Pipe Block

| Part # | Usage |
|---|---|
| T2100 | Useable with 2"-8" Pipe |

## Pipe Strap

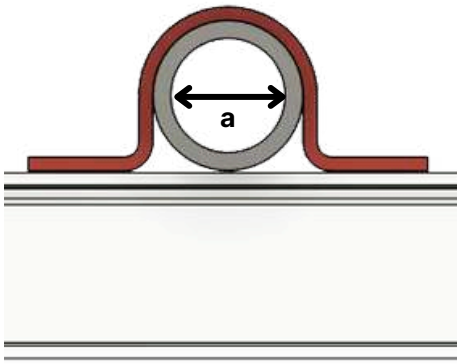


| Part # | Rigid Pipe Size (a) | Hole Size | Load Capacity (Lbs) |
|---|---|---|---|
| T2200-1/2 | 1/2" | 9/32" | 500 |
| T2200-3/4 | 3/4" | 9/32" | 500 |
| T2201 | 1" | 9/32" | 500 |
| T2201-1/4 | 1-1/4" | 9/32" | 500 |
| T2201-1/2 | 1-1/2" | 9/32" | 500 |
| T2202 | 2" | 7/16" | 1000 |
| T2202-1/2 | 2-1/2" | 7/16" | 1000 |
| T2203 | 3" | 7/16" | 1000 |
| T2203-1/2" | 3-1/2" | 7/16" | 1000 |
| T2204 | 4" | 7/16" | 1000 |
| T2205 | 5" | 7/16" | 1000 |
| T2206 | 6" | 7/16" | 1000 |
| T2208 | 8" | 9/16" | 1200 |
| T2200-10 | 10" | 9/16" | 1200 |

**Contact us for custom sizing.**

The specifications in this document are for reference only and subject to change without prior notice

## General Fittings Product Variables

**Available Materials:**

- **Mild Steel (44W/50W/A36/A1011)**
- **Stainless Steel - Type 304 (SS4) or 316 (SS)**
  - **Example: T3012-SS4 or T3012-SS**

**Available Finishes / Part Number Suffix (-XX):**

- **Hot Dipped Galvanized (-HG)**
  - **Example: T3012-HG**
- **Zinc / Electro-Galvanized (-ZC)**
  - **Example: T3012-ZC**

# T3000: GENERAL FITTINGS

## 90 Degree Fittings - Crossing Angles (T3012-T3025)

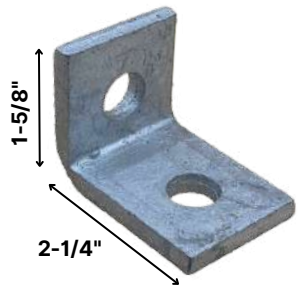


**T3012**
**Crossing Angle - 2 Hole**

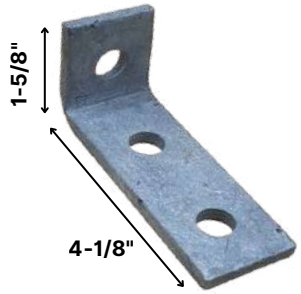


**T3013**
**Crossing Angle - 3 Hole**

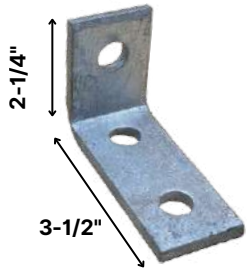


**T3013-A**
**Crossing Angle - 3 Hole**

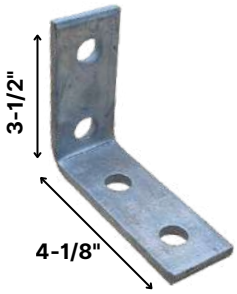


**T3014**
**Crossing Angle - 4 Hole**

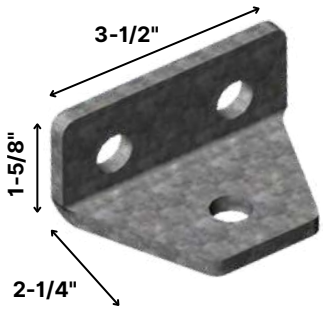


**T3023**
**Crossing Angle Wide - 3 Hole**

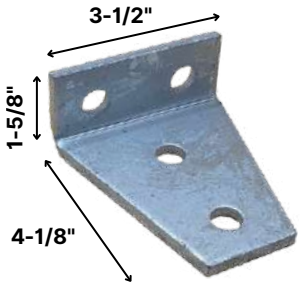


**T3024**
**Crossing Angle Wide - 4 Hole**

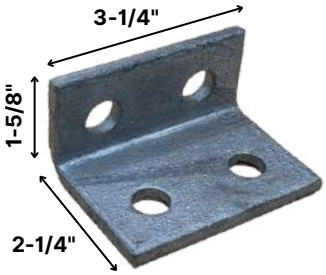


**T3024-A**
**Crossing Angle Wide - 4 Hole**

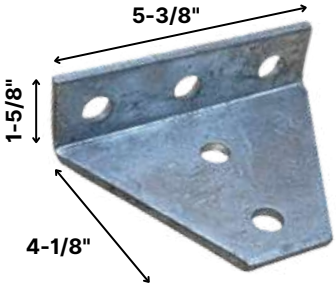


**T3025**
**Crossing Angle Wide - 5 Hole**

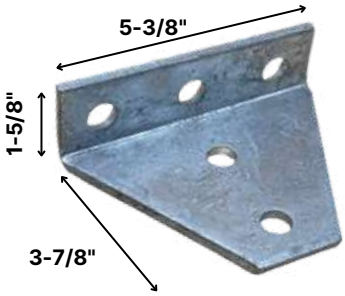


**T3025 - A**
**Crossing Angle Wide - 5 Hole**

**Standard Dimensions (Unless specified otherwise)**

| Hole Spacing (From End) | Hole Spacing (On-Center) | Hole Diameter | Material Thickness |
|---|---|---|---|
| 13/16" | 1-7/8" | 9/16" | 1/4" |

The specifications in this document are for reference only and subject to change without prior notice

TECHNISTRUT STRUT PRODUCTS

# T3000: GENERAL FITTINGS

## 90 Degree Fittings - Corner Angles (T3025-T3044)

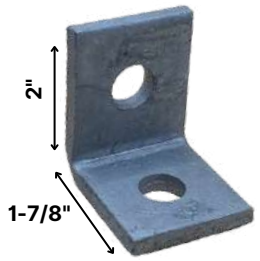


**T3032**
**Corner Angle - 2 Hole**

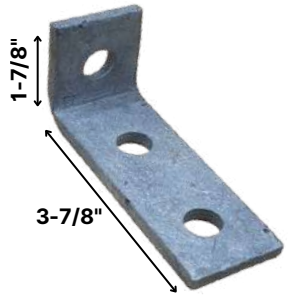


**T3033**
**Corner Angle - 3 Hole**

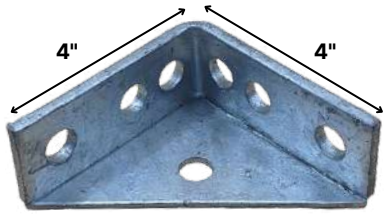


**T3034**
**Corner Angle - Universal**

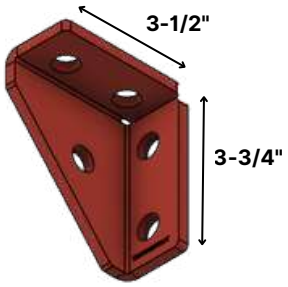


**T3035-L**
**Corner Angle - 5 Hole w/ Gusset**
**Left Hand**

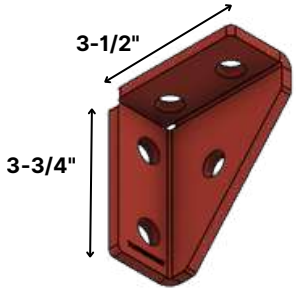


**T3035-R**
**Corner Angle - 5 Hole w/ Gusset**
**Right Hand**

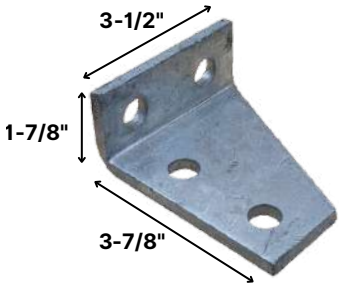


**T3044-LO**
**Corner Angle Wide - 4 Hole**
**Left Outside**

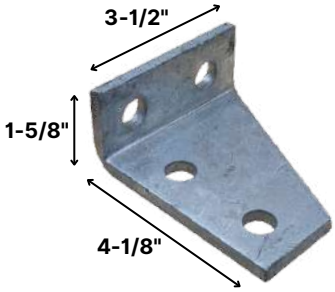


**T3044-LI**
**Corner Angle Wide - 4 Hole**
**Left Inside**

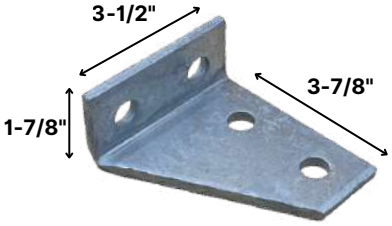


**T3044-RO**
**Corner Angle Wide - 4 Hole**
**Right Outside**

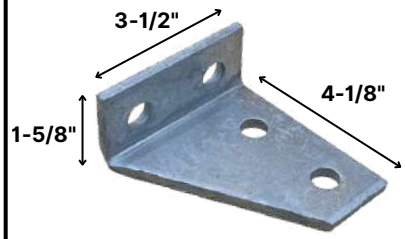


**T3044-RI**
**Corner Angle Wide - 4 Hole**
**Right Inside**

**Standard Dimensions (Unless specified otherwise)**

| Hole Spacing (From End) | Hole Spacing (On-Center) | Hole Diameter | Material Thickness |
|---|---|---|---|
| 13/16" | 1-7/8" | 9/16" | 1/4" |

The specifications in this document are for reference only and subject to change without prior notice

TECHNISTRUT STRUT PRODUCTS

# T3000: GENERAL FITTINGS

## 90 Degree Fittings - Tee, Offset, Slotted Angles (T3054-T3092)

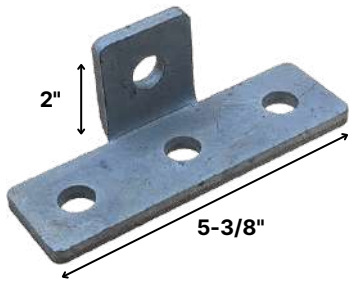


**T3054**
**Tee Angle - 4 Hole**

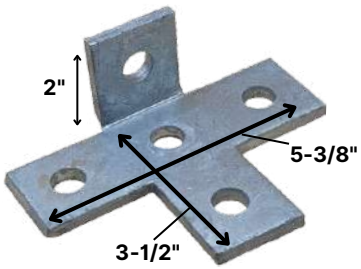


**T3055**
**Tee Angle - 5 Hole**

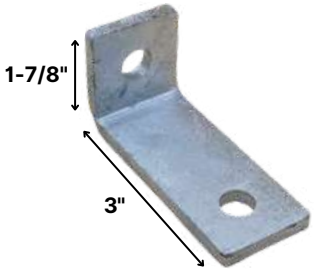


**T3073**
**Offset Angle - 2 Hole**

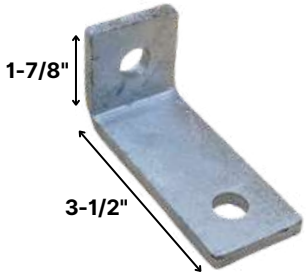


**T3073-1/2**
**Offset Angle - 2 Hole**

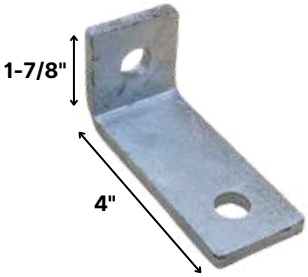


**T3074**
**Offset Angle - 2 Hole**

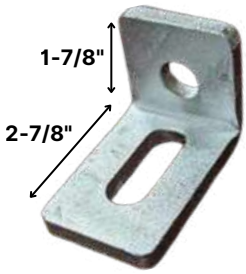


**T3082**
**Slotted Angle - 2 Hole**

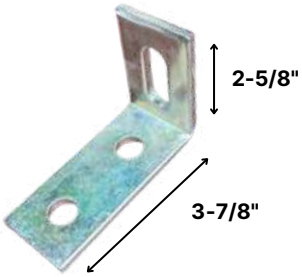


**T3083**
**Slotted Angle - 3 Hole**

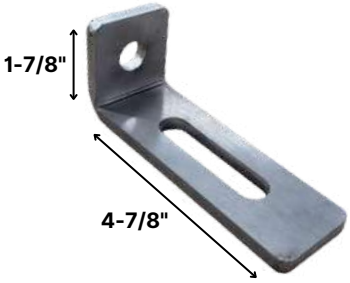


**T3084**
**Slotted Angle - 2 Hole**

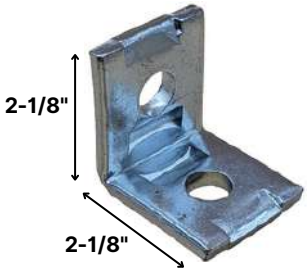


**T3092**
**No Twist Angle - 2 Hole**

**Standard Dimensions (Unless specified otherwise)**

| Hole Spacing (From End) | Hole Spacing (On-Center) | Hole Diameter | Material Thickness |
|---|---|---|---|
| 13/16" | 1-7/8" | 9/16" | 1/4" |

The specifications in this document are for reference only and subject to change without prior notice

# T3000: GENERAL FITTINGS

## Angular Fittings (T3102-3125)

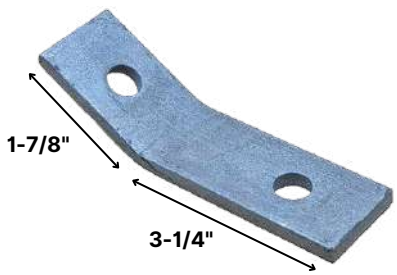


**T3102**
**Open Angle - 2 Hole**

| Angle Degree | |
|---|---|
| T3102-30 | 30° |
| T3102-45 | 45° |
| T3102-60 | 60° |

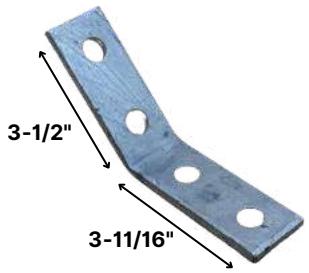


**T3104**
**Open Angle - 4 Hole**

| Angle Degree | |
|---|---|
| T3104-30 | 30° |
| T3104-45 | 45° |
| T3104-60 | 60° |

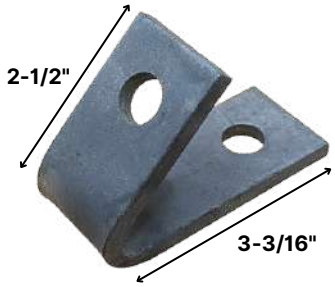


**T3112**
**Closed Angle - 2 Hole**

| Angle Degree | |
|---|---|
| T3112-30 | 30° |
| T3112-45 | 45° |
| T3112-60 | 60° |

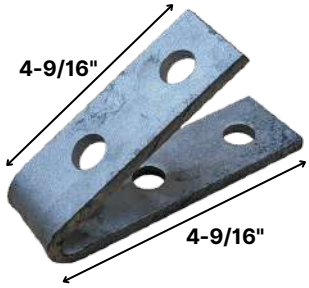


**T3114**
**Closed Angle - 4 Hole**

| Angle Degree | |
|---|---|
| T3114-30 | 30° |
| T3114-45 | 45° |
| T3114-60 | 60° |

**T3120**
**Single Adjustable Brace Fitting**

**T3125**
**Double Adjustable Brace Fitting**

| Standard Dimensions (Unless specified otherwise) | | | |
|---|---|---|---|
| Hole Spacing (From End) | Hole Spacing (On-Center) | Hole Diameter | Material Thickness |
| 13/16" | 1-7/8" | 9/16" | 1/4" |

The specifications in this document are for reference only and subject to change without prior notice

TECHNISTRUT STRUT PRODUCTS

## Angular Fittings Continued (T3132-T3134)

**T3132**
**Hinged Angle - 2 Hole**

**T3133**
**Hinged Angle - 3 Hole**

**T3134**
**Hinged Angle - 4 Hole**

## End Caps for Strut (T3200)

***14ga Material**

**T3200**
**End Cap**
**Custom Size Available**

| Strut Size | |
|---|---|
| T3200-13/16 | 13/16" |
| T3201 | 1" |
| T3200 | 1-5/8" |

***8ga (1/8") Material**

**T3211**
**End Cap with Knockout**

| Knockout Size | |
|---|---|
| T3211-1/2 | 1/2" |
| T3211-3/4 | 3/4" |
| T3211 | 1" |

***7ga Material**

**T3220**
**End Cap with Thread**

| Thread Size | |
|---|---|
| T3220-1/2 | 1/2" |
| T3220-3/4 | 3/4" |
| T3221 | 1" |

| Standard Dimensions (Unless specified otherwise) | | | |
|---|---|---|---|
| Hole Spacing (From End) | Hole Spacing (On-Center) | Hole Diameter | Material Thickness |
| 13/16" | 1-7/8" | 9/16" | 1/4" |

The specifications in this document are for reference only and subject to change without prior notice

# T3000: GENERAL FITTINGS

## Flat Plate Fittings (T3302-T3380)

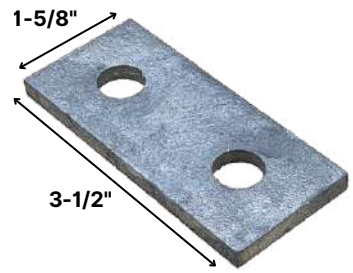


**T3302**
**Splice Plate - 2 Hole**

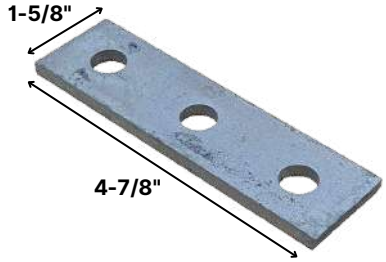


**T3303**
**Splice Plate - 3 Hole**

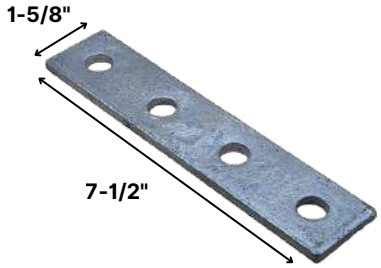


**T3304**
**Splice Plate - 4 Hole**

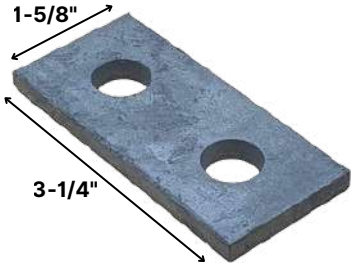


**T3312**
**Crossing Plate - 2 Hole**

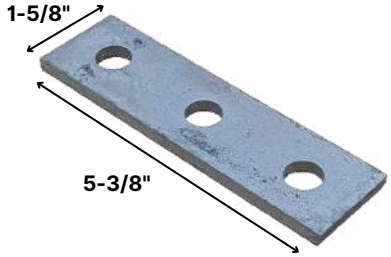


**T3313**
**Crossing Plate - 3 Hole**

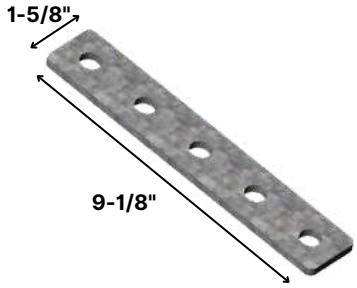


**T3315**
**Crossing Plate - 5 Hole**

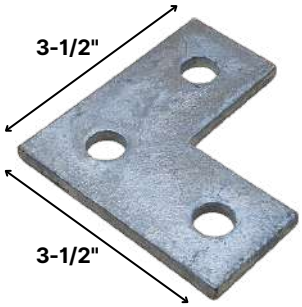


**T3333**
**Corner Plate - 3 Hole**

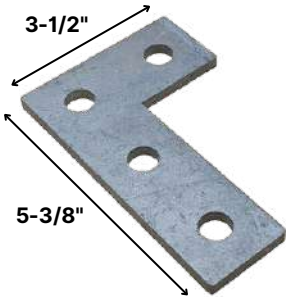


**T3334**
**Corner Plate - 4 Hole**

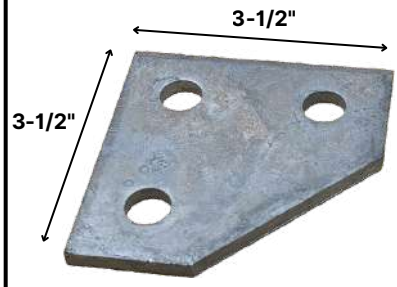


**T3343**
**Corner Plate Wide - 3 Hole**

| Standard Dimensions (Unless specified otherwise) | | | |
|---|---|---|---|
| Hole Spacing (From End) | Hole Spacing (On-Center) | Hole Diameter | Material Thickness |
| 13/16" | 1-7/8" | 9/16" | 1/4" |

The specifications in this document are for reference only and subject to change without prior notice

## Flat Plate Fittings Continued (T3302-T3380)

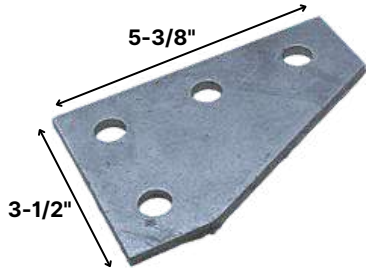


**T3344**
**Wide Corner Plate - 4 Hole**

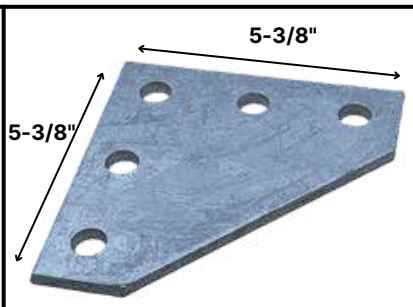


**T3345**
**Wide Corner Plate - 5 Hole**

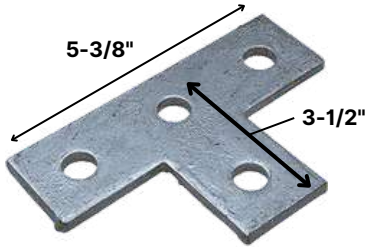


**T3354**
**Tee Plate - 4 Hole**

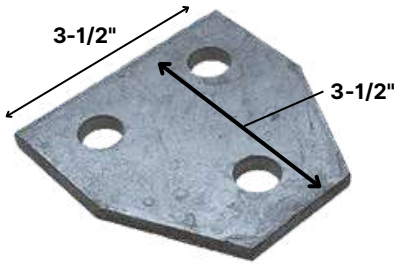


**T3363**
**Wide Tee Plate - 3 Hole**

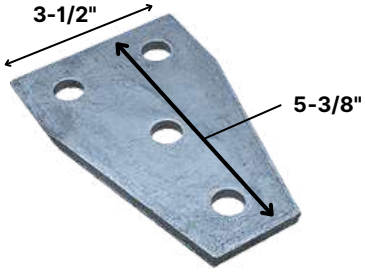


**T3364**
**Wide Tee Plate - 4 Hole**

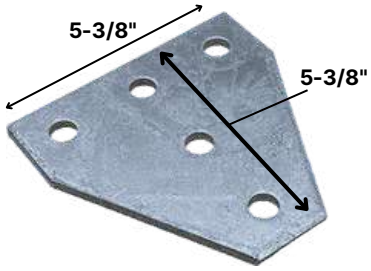


**T3365**
**Wide Tee Plate - 5 Hole**

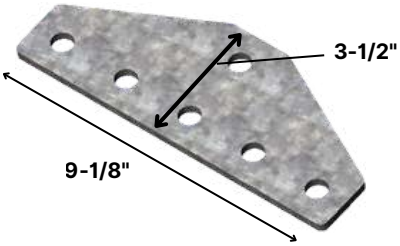


**T3366**
**Wide Tee Plate - 6 Hole**

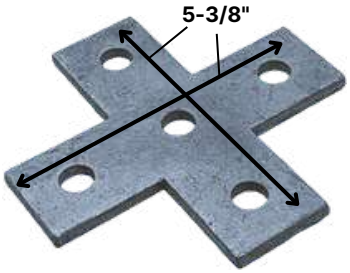


**T3375**
**Cross Plate - 5 Hole**

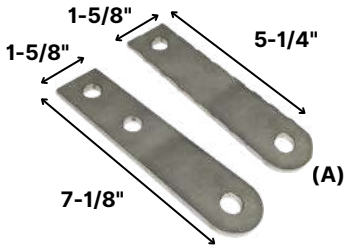


**T3383**
**Adjustable Angle Plate - 3 Hole**

**T3382**
**Adjustable Angle Plate - 2 Hole**

| Standard Dimensions (Unless specified otherwise) | | | |
|---|---|---|---|
| **Hole Spacing (From End)** | **Hole Spacing (On-Center)** | **Hole Diameter** | **Material Thickness** |
| 13/16" | 1-7/8" | 9/16" | 1/4" |

The specifications in this document are for reference only and subject to change without prior notice

TECHNISTRUT STRUT PRODUCTS

## U-Fittings (T3402-T3480)

Material: 16GA Steel

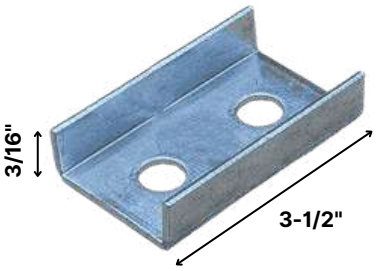


**T3402-A**
**U-Splice - 2 Hole for 13/16" Strut**

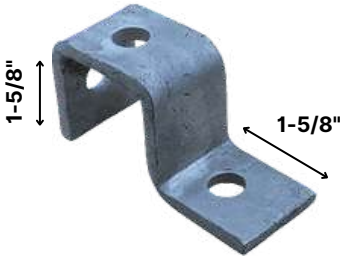


**T3403**
**U-Splice - 3 Hole for 1-5/8" Strut**

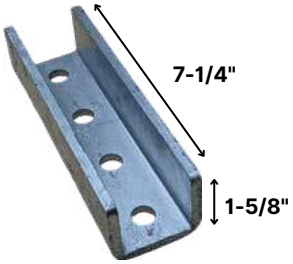


**T3404**
**U-Splice - 4 Hole for 1-5/8" Strut**

Material: 11GA Steel

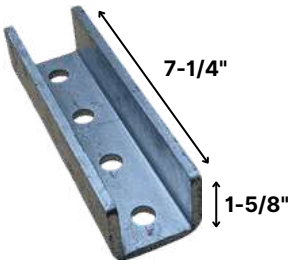


**T3404-A**
**U-Splice - 4 Hole for 1-5/8" Strut**

Material: 16GA Steel

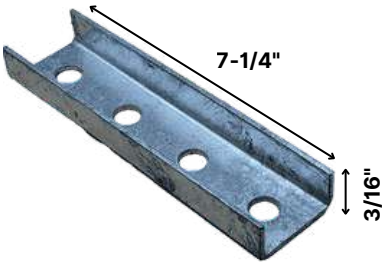


**T3404-13/16**
**U-Splice - 4 Hole for 13/16" Strut**

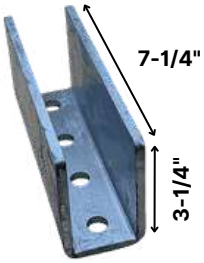


**T3404-3-1/4**
**U-Splice - 4 Hole for 3-1/4" Strut**

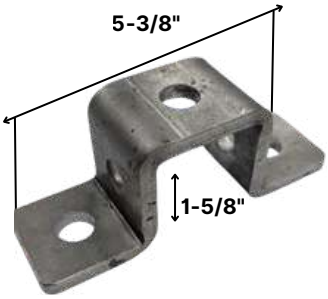


**T3410**
**Crossing U-Fitting for 1-5/8" Strut**

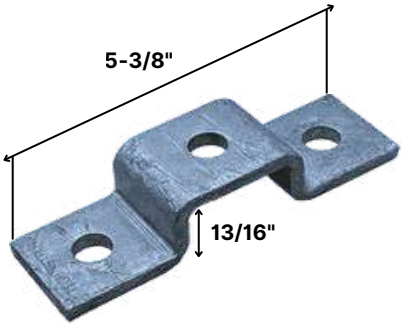


**T3410-13/16**
**Crossing U-Fitting for 13/16" Strut**

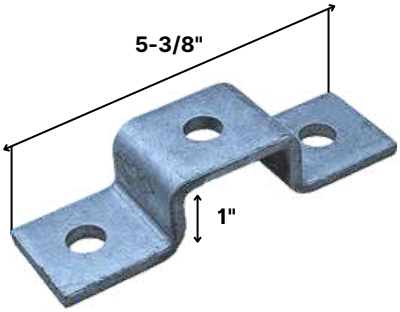


**T3411**
**Crossing U-Fitting for 1" Strut**

| Standard Dimensions (Unless specified otherwise) | | | |
|---|---|---|---|
| Hole Spacing (From End) | Hole Spacing (On-Center) | Hole Diameter | Material Thickness |
| 13/16" | 1-7/8" | 9/16" | 1/4" |

The specifications in this document are for reference only and subject to change without prior notice

## U-Fittings Continued (T3402-T3480)

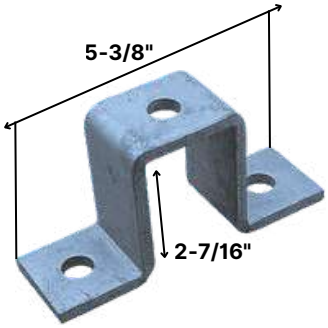


**T3412-7/16**
**Crossing U-Fitting for 2-7/16" Strut**

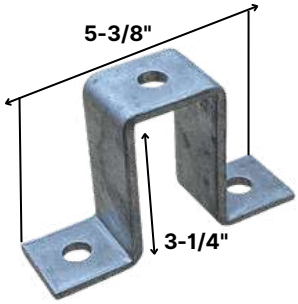


**T3413-1/4**
**Crossing U-Fitting for 3-1/4" Strut**

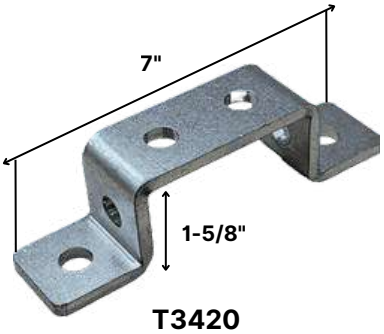


**T3420**
**Wide Crossing U-Fitting for 1-5/8" Strut**

**Material: 16GA Steel**

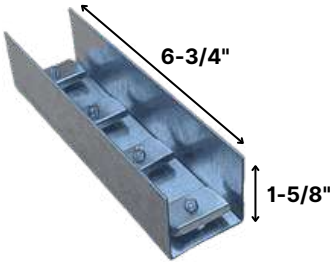


**T3470**
**U-Splice With Hardware for 1-5/8" Strut**

**Material: 16GA Steel**

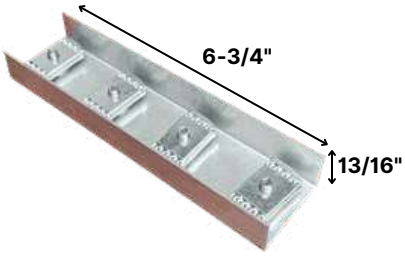


**T3470-13/16**
**U-Splice With Hardware for 13/16" Strut**

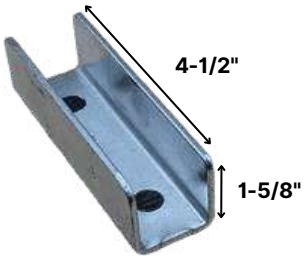


**T3480**
**Inside U Splice for 1-5/8" Strut**

| Standard Dimensions (Unless specified otherwise) | | | |
|---|---|---|---|
| **Hole Spacing (From End)** | **Hole Spacing (On-Center)** | **Hole Diameter** | **Material Thickness** |
| **13/16"** | **1-7/8"** | **9/16"** | **1/4"** |

The specifications in this document are for reference only and subject to change without prior notice

## Wing Fittings (T3515-T3572)

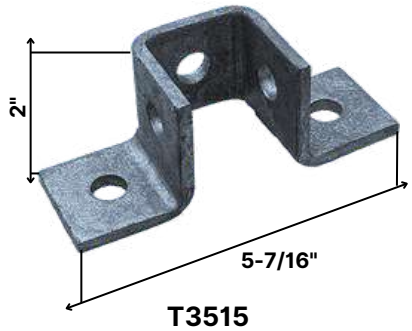


**T3515**
**Crossing Wing - 5 Hole**

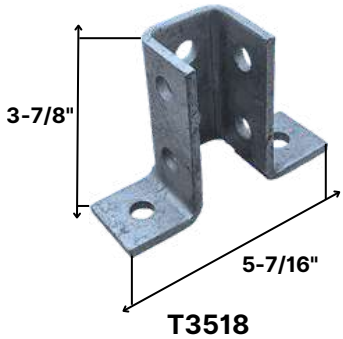


**T3518**
**Crossing Wing - 8 Hole**

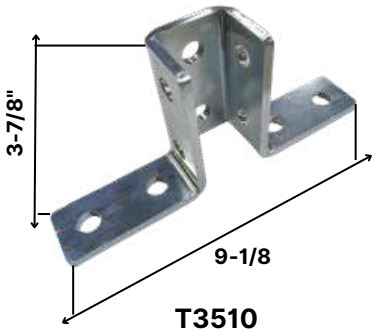


**T3510**
**Crossing Wing - 10 Hole**

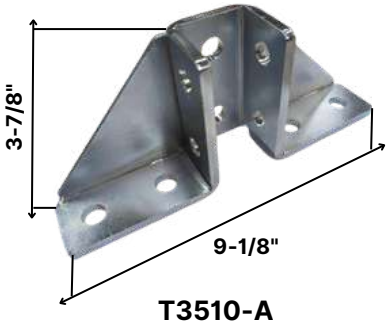


**T3510-A**
**Crossing Wing with Gusset - 10 Hole**

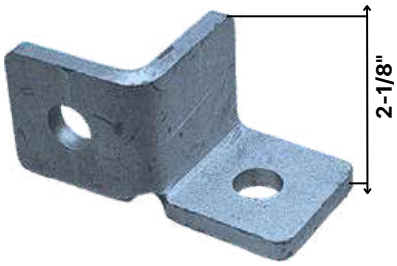


**T3532L**
**Corner Wing - 2 Hole LH**

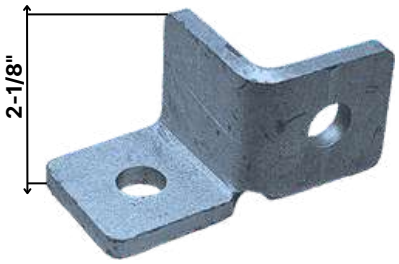


**T3532R**
**Corner Wing - 2 Hole RH**

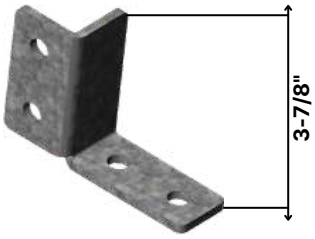


**T3534L**
**Corner Wing - 4 Hole LH**

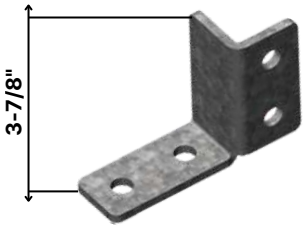


**T3534R**
**Corner Wing - 4 Hole RH**

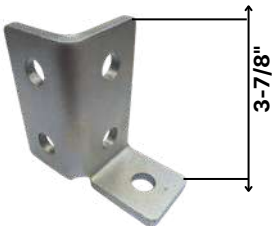


**T3535L**
**Corner Wing - 5 Hole LH**

**Standard Dimensions (Unless specified otherwise)**

| Hole Spacing (From End) | Hole Spacing (On-Center) | Hole Diameter | Material Thickness |
|---|---|---|---|
| 13/16" | 1-7/8" | 9/16" | 1/4" |

The specifications in this document are for reference only and subject to change without prior notice

## Wing Fittings Continued (T3515-T3572)

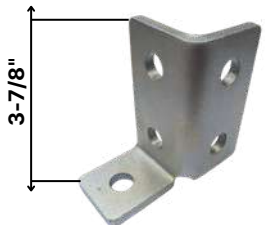


**T3535R**
**Corner Wing - 5 Hole RH**

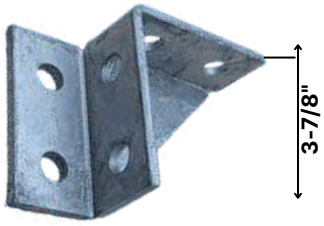


**T3536L-A**
**Gusseted Corner Wing - 6 Hole LH**

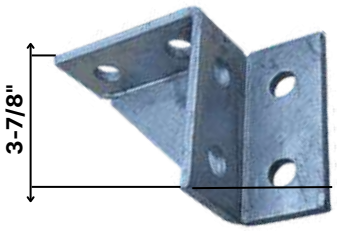


**T3536R-A**
**Gusseted Corner Wing - 6 Hole RH**

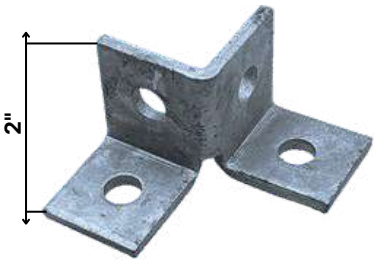


**T3544**
**Dual Corner Wing - 4 Hole**

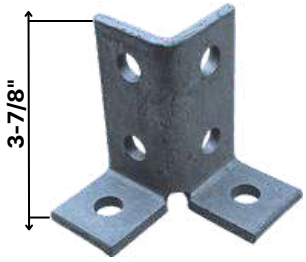


**T3546**
**Dual Corner Wing - 6 Hole**

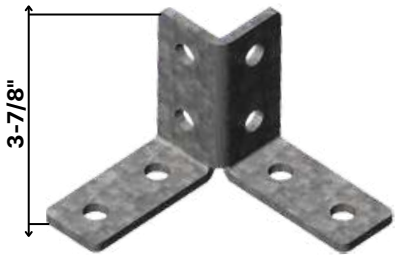


**T3548**
**Dual Corner Wing - 8 Hole**

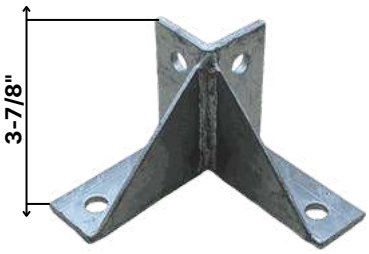


**T3548-A**
**Dual Corner Wing with Gusset - 8 Hole**

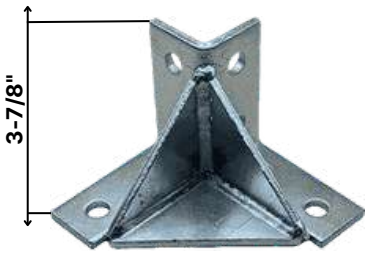


**T3548-B**
**Dual Corner Wing with Gusset & Top Plate - 8 Hole**

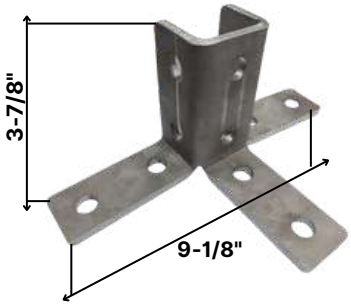


**T3552**
**3 Way Wing - 12 Hole**

**Standard Dimensions (Unless specified otherwise)**

| Hole Spacing (From End) | Hole Spacing (On-Center) | Hole Diameter | Material Thickness |
|---|---|---|---|
| 13/16" | 1-7/8" | 9/16" | 1/4" |

The specifications in this document are for reference only and subject to change without prior notice

## Wing Fittings Continued (T3515-T3572)

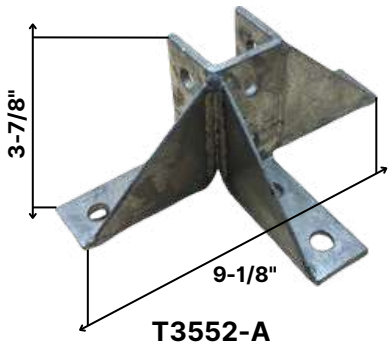


**T3552-A**
**3-Way Gusseted Wing - 12 Hole**

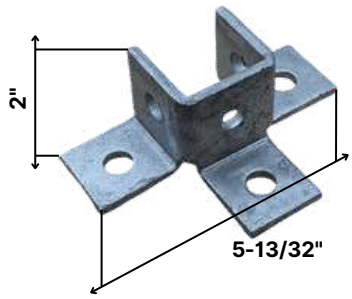


**T3556**
**3 Way Fitting - 6 Hole**

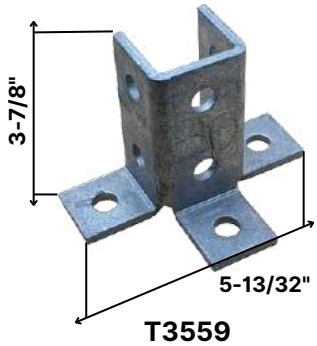


**T3559**
**3 Way Wing - 9 Hole**

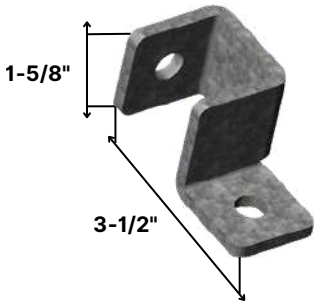


**T3572L**
**Rear Wing - 2 Hole LH**

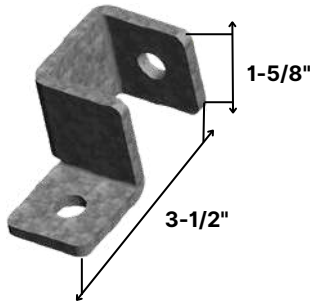


**T3572R**
**Rear Wing - 2 Hole RH**

| Standard Dimensions (Unless specified otherwise) | | | |
|---|---|---|---|
| **Hole Spacing (From End)** | **Hole Spacing (On-Center)** | **Hole Diameter** | **Material Thickness** |
| **13/16"** | **1-7/8"** | **9/16"** | **1/4"** |

The specifications in this document are for reference only and subject to change without prior notice

## Z-Fittings

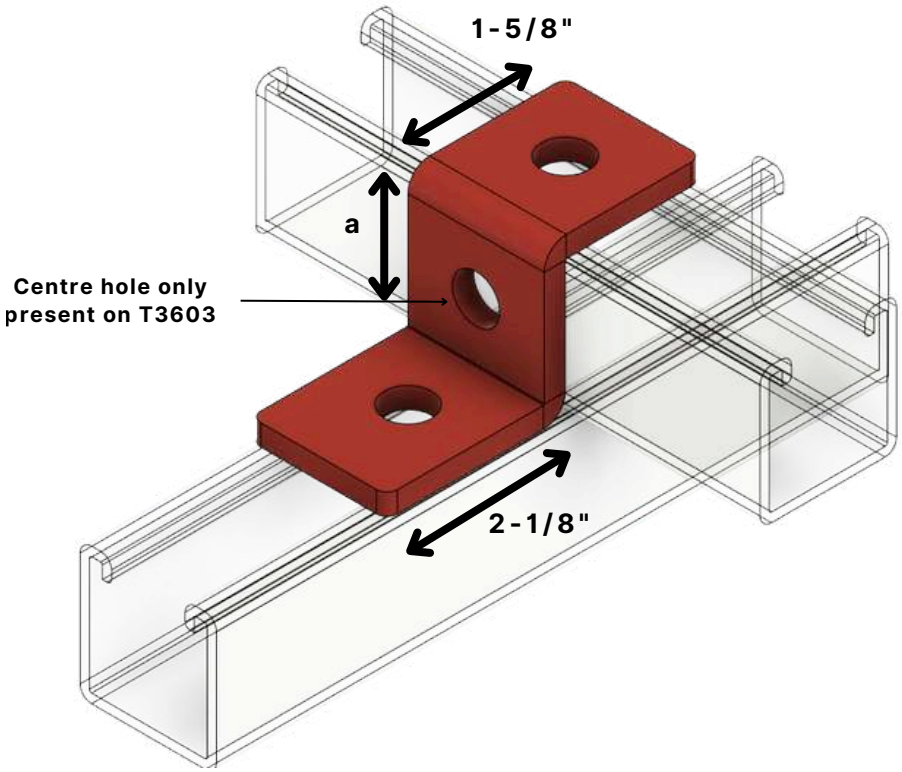


| Part # | Height (a) | Strut Channel Height |
|---|---|---|
| T3600 | 1-5/8" | 1-5/8" |
| T3600-13/16 | 13/16" | 13/16" |
| T3601 | 1" | 1" |
| T3602-7/16 | 2-7/16" | 2-7/16" |
| T3600-1/4 | 1/4" | 1/4" |

The specifications in this document are for reference only and subject to change without prior notice

# T4000: CLAMPING NUTS

## General Fittings Product Variables

**Available Materials:**

- **Mild Steel (44W/50W/A36/A1011)**
- **Stainless Steel - Type 304 (SS4) or 316 (SS)**
  - **Example: T4002-SS4 or T4002-SS**

**Available Finishes / Part Number Suffix (-XX):**

- **Hot Dipped Galvanized (-HG)**
  - **Example: T4002-HG**
- **Zinc / Electro-Galvanized (-ZC)**
  - **Example: T4002-ZC**

| No Spring | |
|---|---|
| Part # | Thread Size |
| T4002 | 3/8" |
| T4004 | 5/8" |
| T4006 | 3/4" |

| Regular Spring | | |
|---|---|---|
| Part # | Thread Size | Spring Length |
| T4101 | 1/4" | 1.5" |
| T4102 | 3/8" | 1.5" |
| T4103 | 1/2" | 1.5" |

| Short Spring | | |
|---|---|---|
| Part # | Thread Size | Spring Length |
| T4202 | 3/8" | 0.375" |
| T4203 | 1/2" | 0.375" |
| T4204 | 5/8" | 0.375" |

| Long Spring | | |
|---|---|---|
| Part # | Thread Size | Spring Length |
| T4303 | 1/2" | 2.875" |

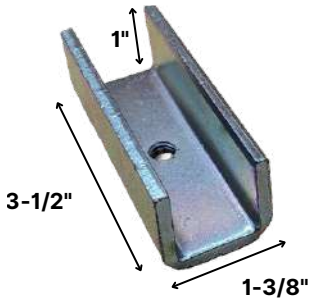


| U-Shaped | |
|---|---|
| Part # | Thread Size |
| T4303 | 1/2" |

The specifications in this document are for reference only and subject to change without prior notice

## General Fittings Product Variables

**Available Materials:**

- **Mild Steel (44W/50W/A36/A1011)**
- **Stainless Steel - Type 304 (SS4) or 316 (SS)**
  - **Example: T5140-SS4 or T5140-SS**

**Available Finishes / Part Number Suffix (-XX):**

- **Hot Dipped Galvanized (-HG)**
  - **Example: T5140-HG**
- **Zinc / Electro-Galvanized (-ZC)**
  - **Example: T5140-ZC**

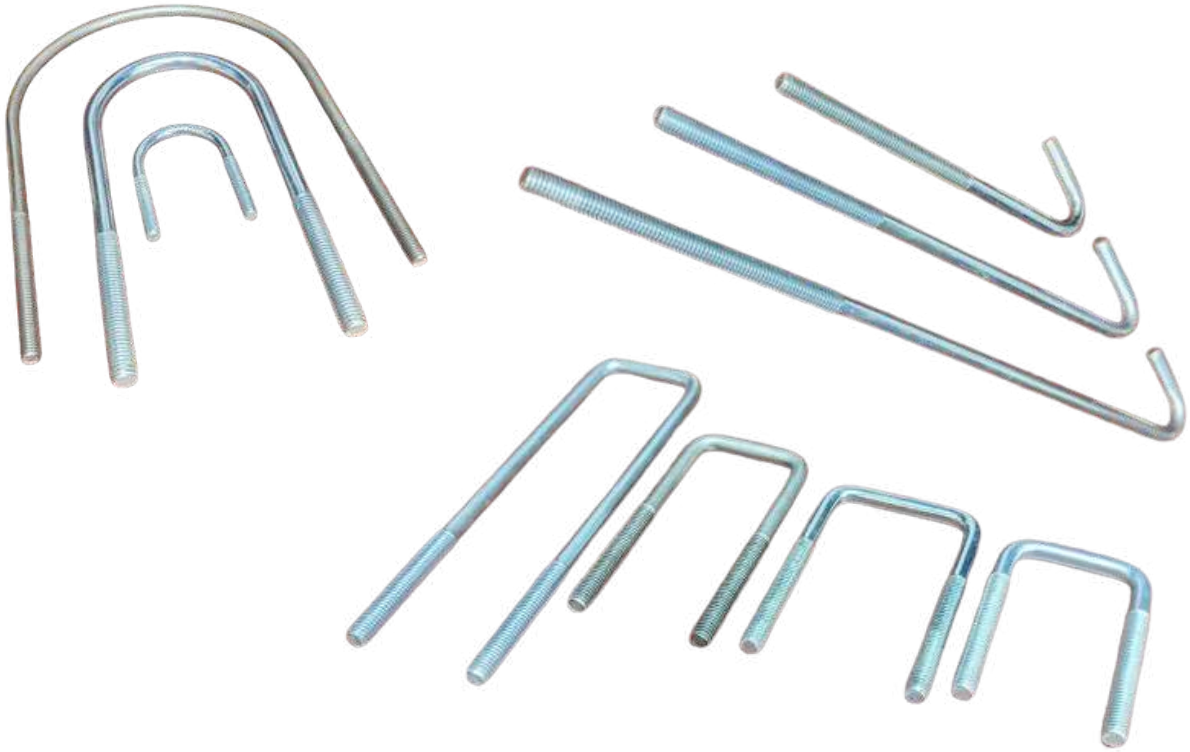

## Strut U-Bolts (T5140)

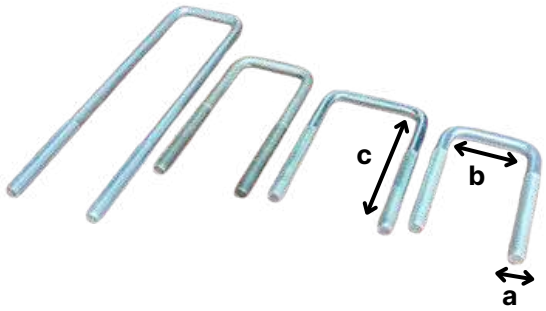


| Part # | Thread Size (a) | Width (b) | Length (c) |
|---|---|---|---|
| T5140 | 3/8" | 1-3/4" | 3-3/8" |
| T5141 | 3/8" | 1-3/4" | 4-5/8" |
| T5142 | 3/8" | 1-3/4" | 8-1/4" |

## Custom U-Bolts

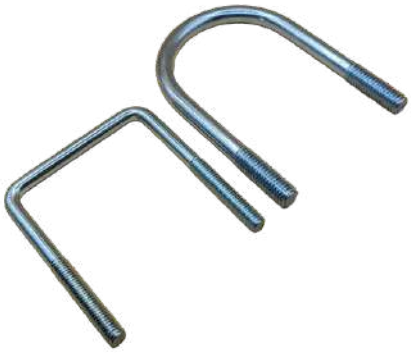

| Part # | Thread Size (a) | Width (b) | Length (c) |
|---|---|---|---|
| Custom | Custom | Custom | Custom |

**Contact us for a quote for any custom sized U-Bolts**

## J-Hook (T5246-T5250)

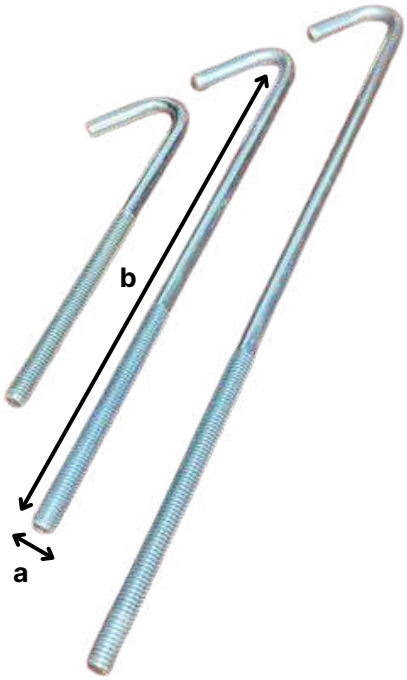


| Part # | Thread Size (a) | Length (b) |
|---|---|---|
| T5246 | 3/8" | 6" |
| T5247 | 3/8" | 7" |
| T5248 | 3/8" | 8" |
| T5249 | 3/8" | 9" |
| T5240-10 | 3/8" | 10" |
| T5240-12 | 3/8" | 12" |
| T5240-14 | 3/8" | 14" |
| T5250-11 | 1/2" | 11" |
| T5250-19.5 | 1/2" | 19.5" |

The specifications in this document are for reference only and subject to change without prior notice

## General Fittings Product Variables

**Available Materials:**

- **Mild Steel (44W/50W/A36/A1011)**
- **Stainless Steel - Type 304 (SS4) or 316 (SS)**
  - **Example: T6002-SS4 or T6002-SS**

**Available Finishes / Part Number Suffix (-XX):**

- **Hot Dipped Galvanized (-HG)**
  - **Example: T6002-HG**
- **Zinc / Electro-Galvanized (-ZC)**
  - **Example: T6002-ZC**

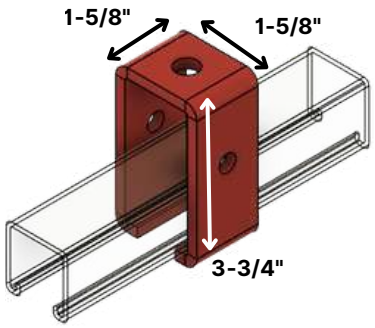


**T6002**
**Channel Trolley Support**
**(1200lbs)**

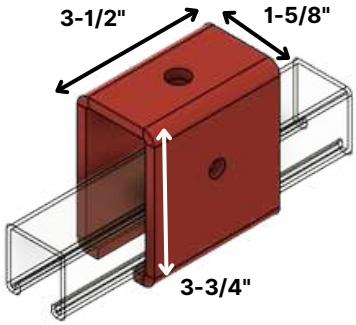


**T6003**
**Channel Trolley Support**
**(2500lbs)**

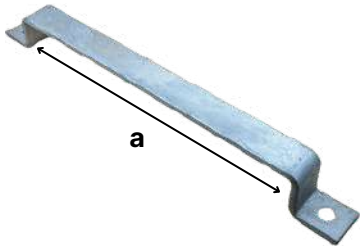


| Ladder Rung (T6112-T6118) | |
|---|---|
| Part # | Rung Length (a) |
| T6112 | 12" |
| T6115 | 15" |
| T6118 | 18" |

**T6000**
**Two Wheel Trolley**

**T6001**
**Four Wheel Trolley**

## General Fittings Product Variables

**Available Materials:**

- **Mild Steel (44W/50W/A36/A1011)**
- **Stainless Steel - Type 304 (SS4) or 316 (SS)**
  - **Example: T7040-SS4 or T7040-SS**

**Available Finishes / Part Number Suffix (-XX):**

- **Hot Dipped Galvanized (-HG)**
  - **Example: T7040-HG**
- **Zinc / Electro-Galvanized (-ZC)**
  - **Example: T7040-ZC**

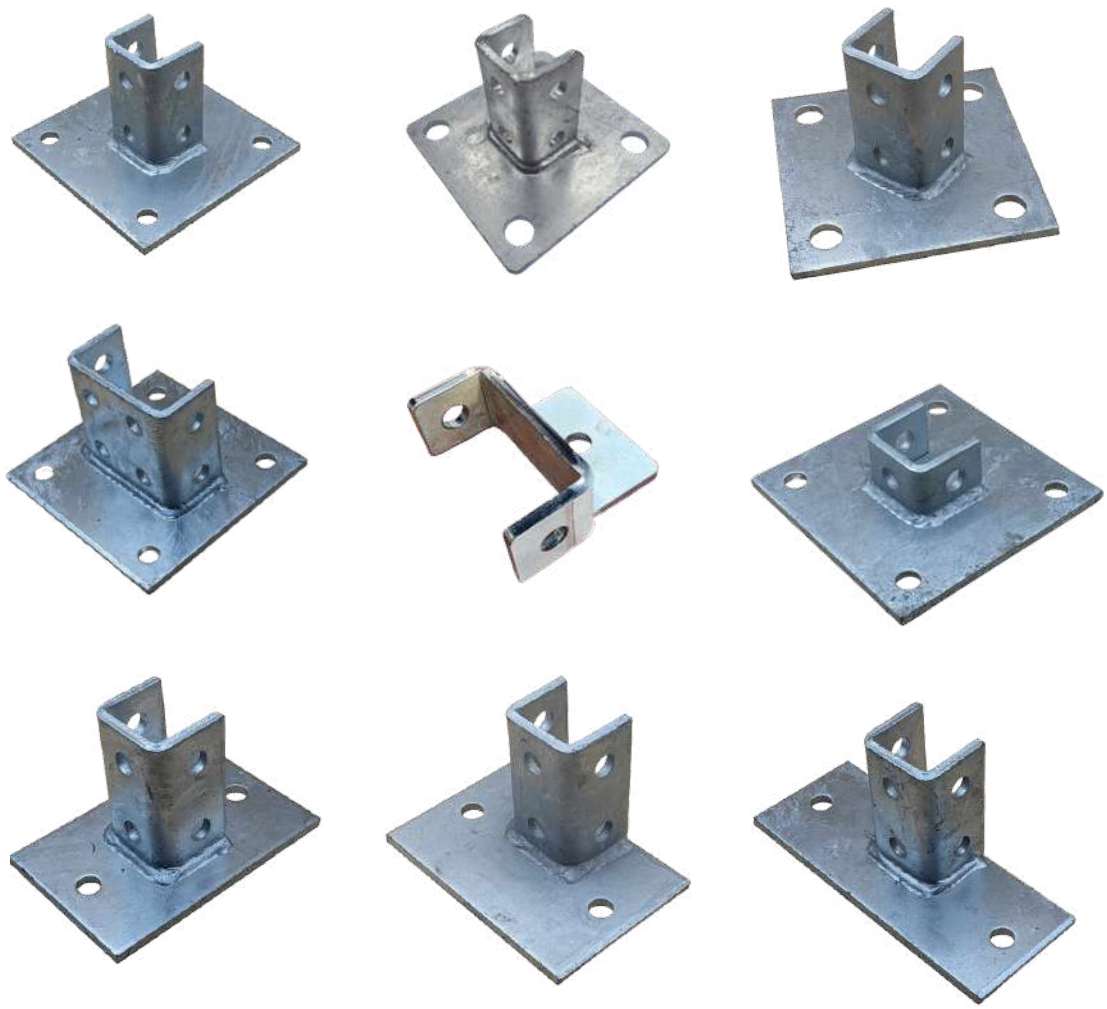

# T7000: POST BASES

## Post Bases (T7030-T7160)

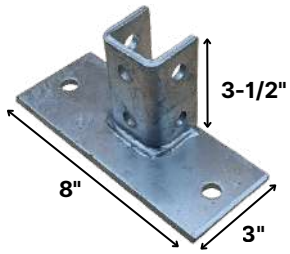


**T7030-F**
**Single Flush Post Base - 8X3 Plate**

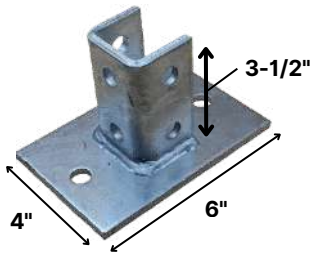


**T7040**
**Single Post Base - 4x6 Plate**

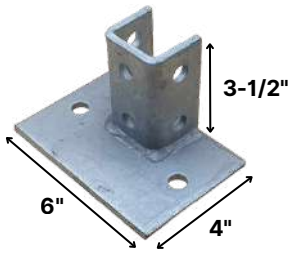


**T7040-F**
**Single Flush Post Base - 4x6 Plate**

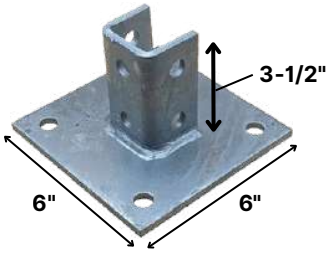


**T7060**
**Single Post Base - 6x6 Plate**

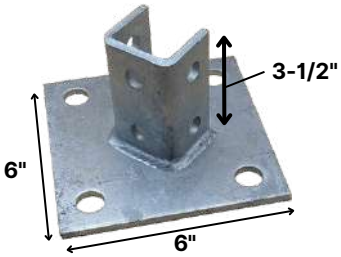


**T7060-A**
**Single Post Base, 45 Deg. - 6x6 Plate**

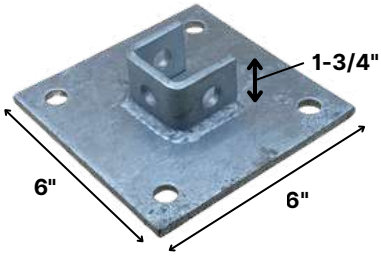


**T7061**
**Single Short Post Base - 6x6 Plate**

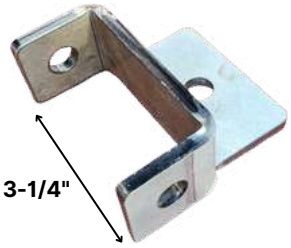


**T7100**
**Double Post Mount**

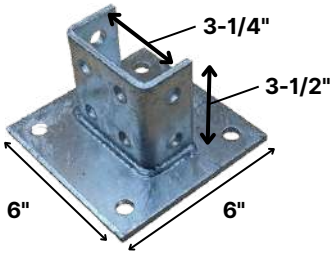


**T7160**
**Double Post Base - 6x6 Plate**

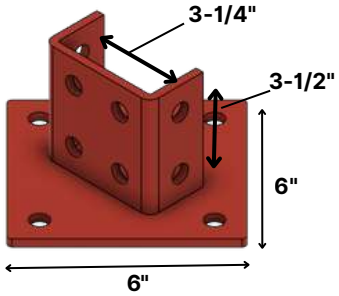


**T7160-A**
**Double Post Base, 45 Deg. - 6x6 Plate**

| Standard Dimensions (Unless specified otherwise) | | | |
|---|---|---|---|
| **Channel Width** | **Channel Hole Spacing (From End)** | **Hole Diameter** | **Material Thickness** |
| **1-5/8"** | **13/16"** | **11/16" (4x6 Plate)<br>3/4" (6x6 Plate)** | **1/4"** |

The specifications in this document are for reference only and subject to change without prior notice

TECHNISTRUT STRUT PRODUCTS

# T8000: BEAM CLAMP

## General Fittings Product Variables

**Available Materials:**

- **Mild Steel (44W/50W/A36/A1011)**
- **Stainless Steel - Type 304 (SS4) or 316 (SS)**
  - **Example: T8010-SS4 or T8010-SS**

**Available Finishes / Part Number Suffix (-XX):**

- **Hot Dipped Galvanized (-HG)**
  - **Example: T8010-HG**
- **Zinc / Electro-Galvanized (-ZC)**
  - **Example: T8010-ZC**

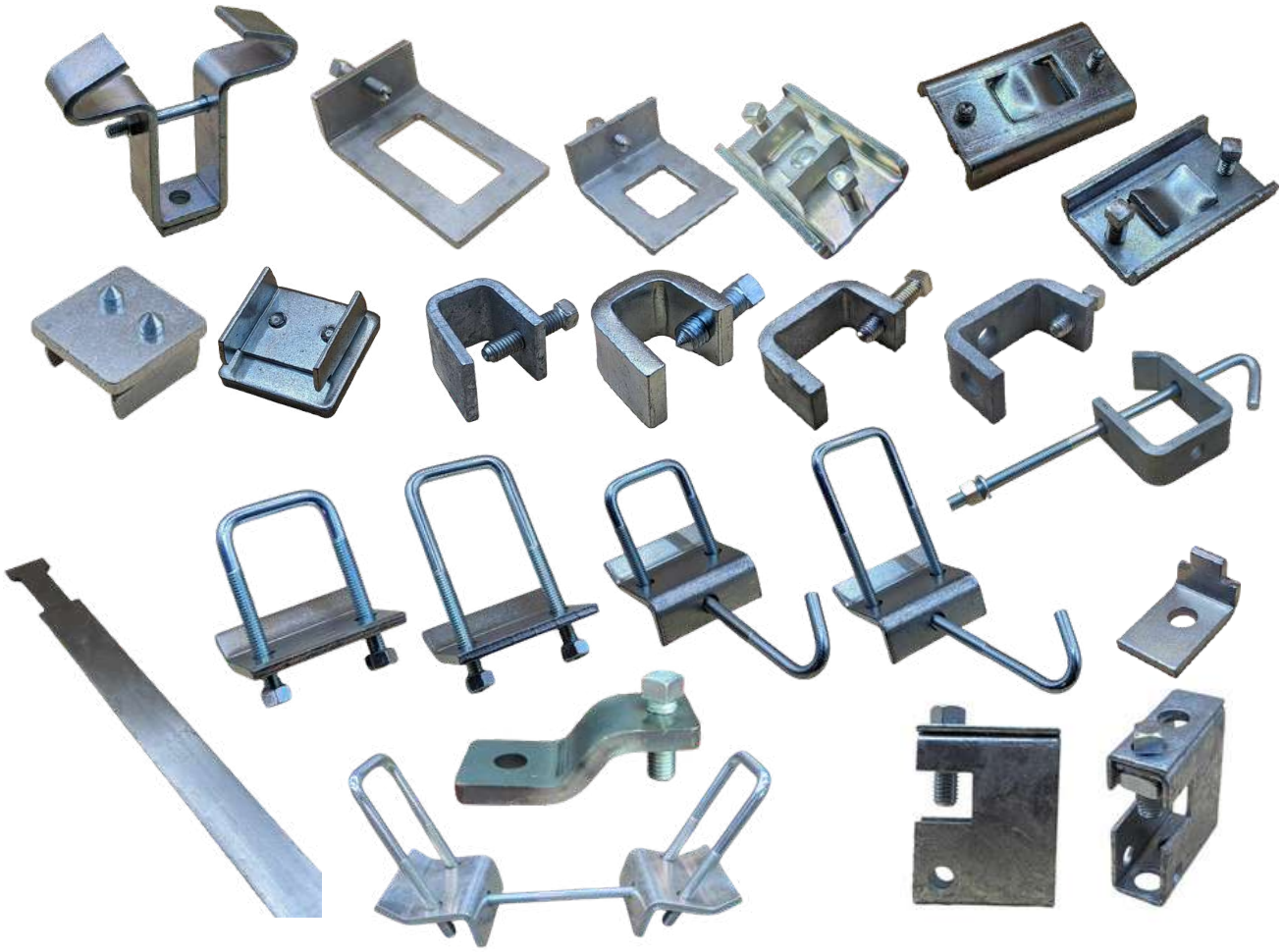

# T8000: BEAM CLAMP

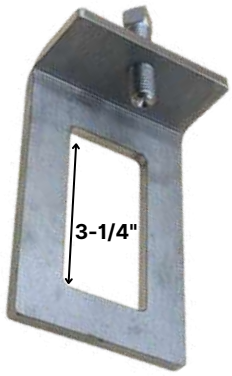


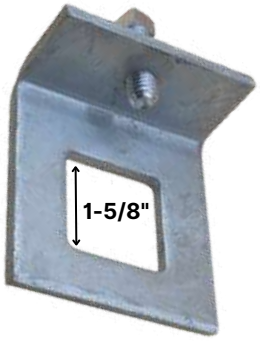


## Window Beam Clamps

| Part # | Material Thickness | Max. Flange | Strut Size | Design Load* |
|---|---|---|---|---|
| T8010 | 1/4" | Up to 7/8" Thick | Single Strut (1-5/8" x 1-5/8") | 480Lbs |
| T8011 | | | Double Strut (1-5/8" x 3-1/4") | |

***When used in pairs with 12GA strut**
**Note: Both clamps include a 1/2" x 1-1/2" set screw**

## C-Style Beam Clamp

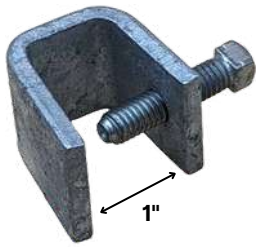


**T8020**
**C-Style Beam Clamp**
**1" Opening**

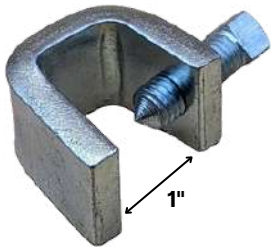


**T8020-A**
**C-Style Beam Clamp**
**1" Opening**

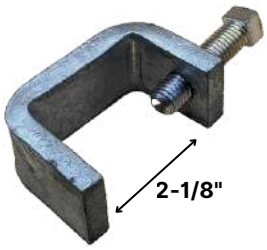


**T8022-1/8**
**C-Style Beam Clamp**
**2-1/8" Opening**

**T8022-1/2**
**C-Style Beam Clamp**
**2-1/2" Opening**

| Part # | Material Thickness | Max Flange (or Min.) | Set Screw Size | Design Load (Lbs)* |
|---|---|---|---|---|
| T8020 | 1/4" | 3/4" | 3/8" x 1-1/2" | 450 |
| T8020-A | 3/8" | 1" | 1/2" x 1-1/2" | 900 |
| T8022-1/8 | 3/8" | 1/2" (Min.) | 1/2" x 2" | 900 |
| T8022-1/2 | 3/8" | 7/8" | 1/2" x 2" | 500 |

***When used in pairs with 12GA strut**

The specifications in this document are for reference only and subject to change without prior notice

# T8000: BEAM CLAMP

## Z-Style Beam Clamp & Flange Strut Beam Clamp

**T8030**
**Z-Style Beam Clamp**

**T8040**
**Flange Strut Beam Clamp**

| Part # | Material Thickness | Max. Flange | Bolt Hole Size | Design Load (Lbs)* |
|---|---|---|---|---|
| T8030 | 3/8" | 7/8" | 9/16" | 600 |
| T8040 | 1/4" | 3/4" | | 600 |

***When used in pairs with 12GA strut**

## Beam Clamps

**T8051-21/32**
**Beam Clamp - 1-21/32" Opening**

**T8050-7/8**
**Beam Clamp - 7/8" Opening**

| Part # | Material Thickness | Max Flange | Set Screw Size | Design Load (Lbs) |
|---|---|---|---|---|
| T8050-7/8 | 1/8" | 13/16" | 1/2" X 1-1/2" | 500 |
| T8051-21/32 | | 1" | | 400 |

The specifications in this document are for reference only and subject to change without prior notice

TECHNISTRUT STRUT PRODUCTS

# T8000: BEAM CLAMP

## J-Hook Beam Clamp with U-Bolt & Deep U-bolt

| Part # | Material Thickness | 3/8" U-Bolt Length | 3/8" J-Hook Length | Max Flange Thickness |
|---|---|---|---|---|
| T8100-6 | 1/4 | 3-3/8" (For 1-5/8" Single Strut) | 6" | 7/8" |
| T8100-8 | | | 8" | |
| T8100-9 | | | 9" | |
| T8100-12 | | | 12" | |
| T8100-14 | | | 14" | |
| T8101-6 | 1/4" | 4-5/8" (For 3.25" Double Strut) | 6" | 7/8" |
| T8101-8 | | | 8" | |
| T8101-9 | | | 9" | |
| T8101-12 | | | 12" | |
| T8101-14 | | | 14" | |

The specifications in this document are for reference only and subject to change without prior notice

# T8000: BEAM CLAMP

## Double U-Bolt Beam Clamp with Threaded Rod

| Part # | Material Thickness | 3/8" U-Bolt Length | 3/8" Threaded Rod Length | Max Flange Thickness |
|---|---|---|---|---|
| T8120-6 | 1/4 | 3-3/8" (For 1-5/8" Single Strut) | 6" | 7/8" |
| T8120-8 | | | 8" | |
| T8120-9 | | | 9" | |
| T8120-12 | | | 12" | |
| T8120-14 | | | 14" | |
| T8121-6 | 1/4" | 4-5/8" (For 3.25" Double Strut) | 6" | 7/8" |
| T8121-8 | | | 8" | |
| T8121-9 | | | 9" | |
| T8121-12 | | | 12" | |
| T8121-14 | | | 14" | |

The specifications in this document are for reference only and subject to change without prior notice

# T8000: BEAM CLAMP

## Hanger Beam Clamp with J-Hook

| Part # | Material Thickness | J-Hook Diameter | J-Hook Length | Flange Width | Hole Size (For Threaded Rod) | Design Load (Lbs) |
|---|---|---|---|---|---|---|
| T8110-11 | 3/8" | 1/2" | 11" | 4"-9" | 9/16" | 500 |
| T8110-19 | | | 19-1/2" | 10"-17" | 9/16" | 500 |

## U-Bolt Beam Clamps

**T8200**
**U-Bolt Beam Clamp**

**T8201**
**U-Bolt Beam Clamp Deep**

| Part # | Material Thickness | U-Bolt Length | Max Flange Thickness | Design Load (Lbs) |
|---|---|---|---|---|
| T8200 | 1/4" | 3-3/8" | 3/4" | 1200 |
| T8201 | | 4-5/8" | | |

The specifications in this document are for reference only and subject to change without prior notice

# T8000: BEAM CLAMP

## Column Insert

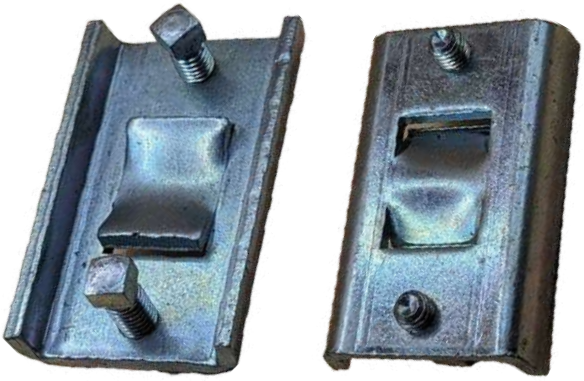

T8300
Column Insert

T8301
Square Column Insert

| Part # | Material Thickness | Set Screw | Pull Out Resistance | Slip Out Resistance | Design Load (Lbs) |
|---|---|---|---|---|---|
| T8300 | 1/4" | 3/8" x 1" | 1000Lbs | 800Lbs | 800 |
| T8301 | | N/A | N/A | N/A | 800 |

## Safety Strap

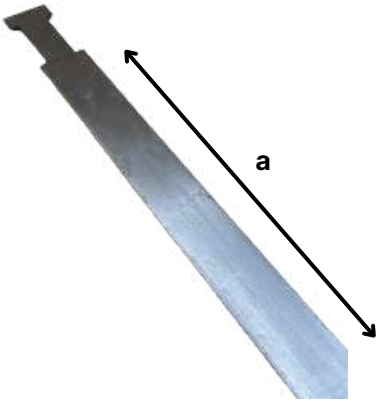


| Part # | Length (a) |
|---|---|
| T8609 | 9" |
| T8612 | 12" |
| T8615 | 15" |
| T8620 | 20" |

The specifications in this document are for reference only and subject to change without prior notice

## General Fittings Product Variables

**Available Materials:**

- **Mild Steel (44W/50W/A36/A1011)**
- **Stainless Steel - Type 304 (SS4) or 316 (SS)**
  - **Example: T9000-SS4 or T9000-SS**

**Available Finishes / Part Number Suffix (-XX):**

- **Hot Dipped Galvanized (-HG)**
  - **Example: T9000-HG**
- **Zinc / Electro-Galvanized (-ZC)**
  - **Example: T9000-ZC**

# T9000: BRACKETS

## Support Bracket

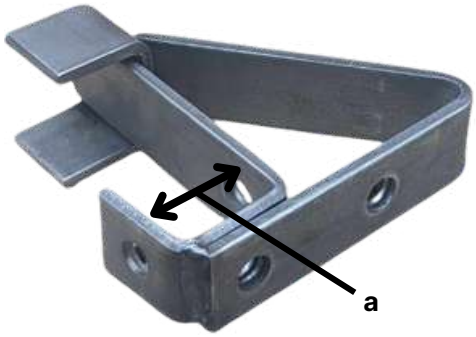


| Part # | Material Thickness | Hole Size | Strut Size (a) | Design Load (Lbs)* |
|---|---|---|---|---|
| T9000 | 1/4" | 9/16" | 1-5/8" | 6300 |
| T9001 | | 9/16" | 3-1/4" | 13000 |

*Design Load in Lbs is for the fitting, not the strut arm. Design load based on the use of 12GA strut,

## Strut Bracket

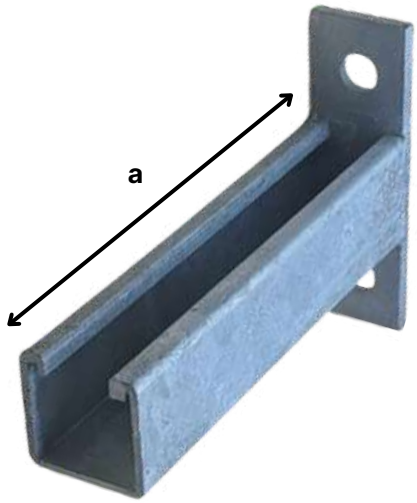


| Part # | Plate Thickness | Hole Size | Strut Length (a) | Design Load (Lbs)* |
|---|---|---|---|---|
| T9106 | 3/8" 12GA Strut Channel | 9/16" | 6" | 1400 |
| T9112 | | | 12" | 1100 |
| T9118 | | | 18" | 500 |
| T9124 | | | 24" | 455 |
| T9130 | | | 30" | 265 |

*Strut length, type, and backplate size customizable to your projects specifications.

## Double Strut Bracket

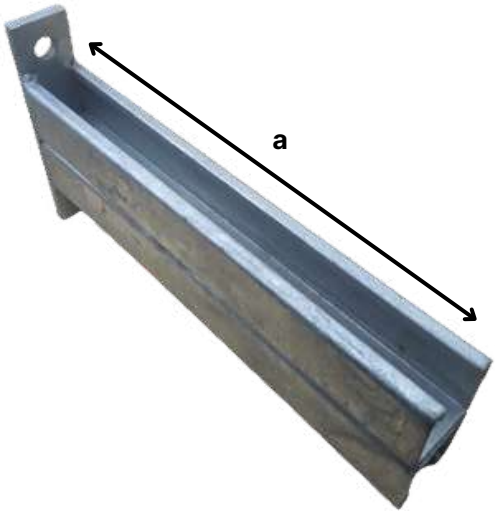


| Part # | Material Thickness | Hole Size | Strut Length (a) | Design Load (Lbs)* |
|---|---|---|---|---|
| T9206 | 3/8" 12GA Strut Channel | 9/16" | 6" | 2150 |
| T9212 | | | 12" | 1900 |
| T9218 | | | 18" | 1200 |
| T9224 | | | 24" | 930 |
| T9230 | | | 30" | 780 |
| T9236 | | | 36" | 610 |

*Strut length, type, and backplate size customizable to your projects specifications.

The specifications in this document are for reference only and subject to change without prior notice

## Cantilever Strut Bracket

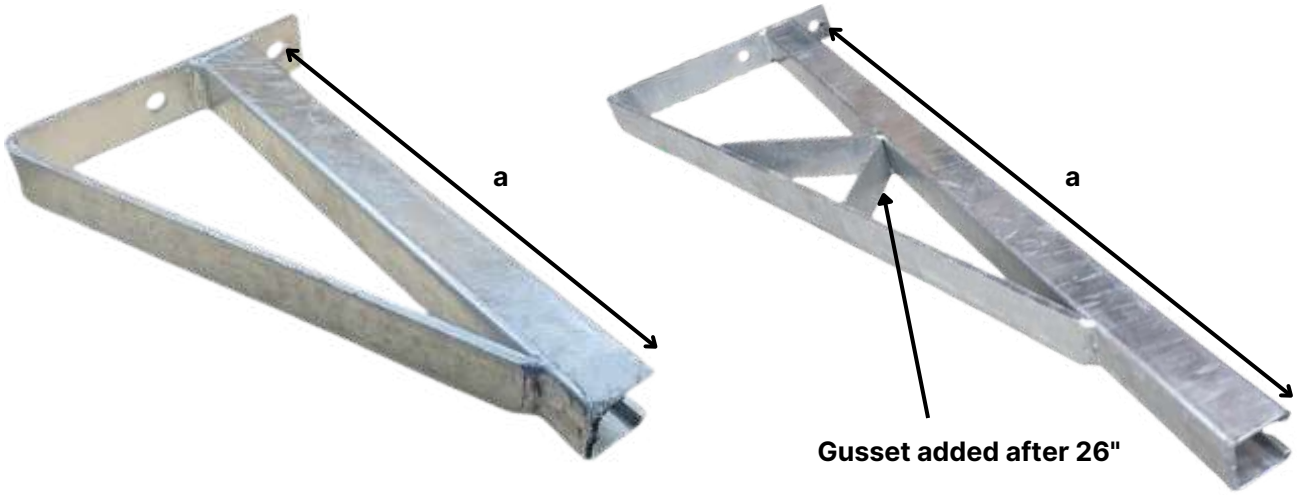


| Part # | Material Thickness | Hole Size | Strut Length (a) | Design Load (Lbs) |
|---|---|---|---|---|
| T9308 | 3/8" Backplate<br>12GA Strut Channel | 9/16" | 8-1/2" | 2000 |
| T9314 | | | 14-1/2" | 2000 |
| T9320 | | | 20-1/2" | 1200 |
| T9326 | | | 26-1/2" | 975 |
| T9332 | | | 32-1/2" | 920 |
| T9338 | | | 38-1/2" | 860 |

***Strut length, type, and backplate size customizable to your projects specifications.**

# T9000: BRACKETS

## Shelf Bracket

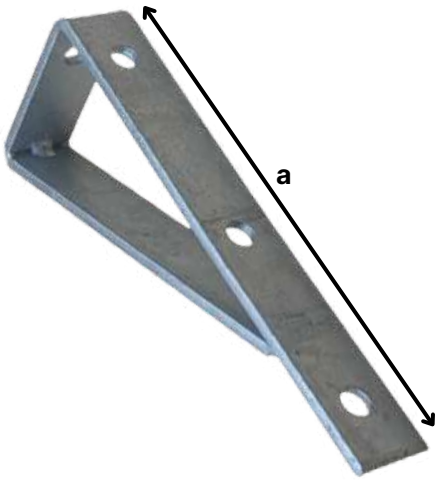


| Part # | Material Thickness | Hole Size | Length (a) | Design Load (Lbs)* |
|---|---|---|---|---|
| T9408 | 1/4" | 9/16" | 8-1/2" | 820 |
| T9410 | | | 10-1/2" | 820 |
| T9412 | | | 12-1/2" | 950 |
| T9414 | | | 14-1/2" | 950 |
| T9416 | | | 16-1/2" | 1150 |
| T9418 | | | 18-1/2" | 1090 |
| T9420 | | | 20-1/2" | 670 |

**Support gusset at 16" or greater**

## Notched Strut Bracket

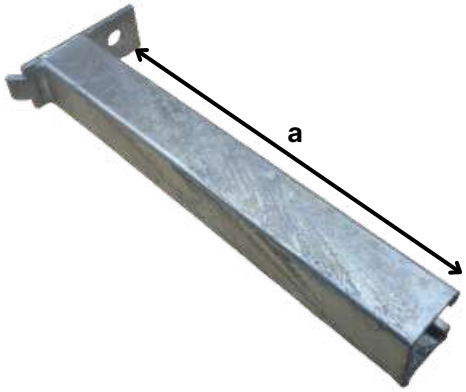


| Part # | Material Thickness | Hole Size | Length (a) | Design Load (Lbs)* |
|---|---|---|---|---|
| T9508 | 1/4" | 9/16" | 8" | 1100 |
| T9514 | | | 14" | 550 |
| T9520 | | | 20" | 350 |
| T9526 | | | 26" | 250 |

## Offset Strut Bracket

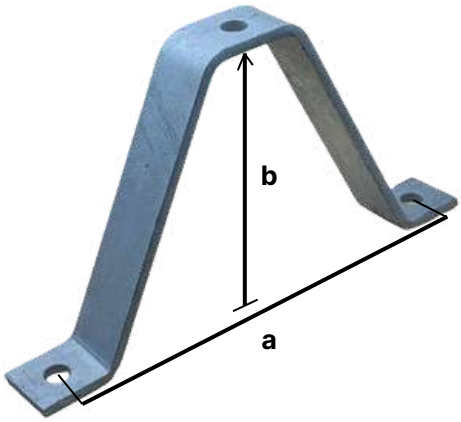


| Part # | Material Thickness | Hole Size | Width (a) | Depth (b) |
|---|---|---|---|---|
| T9606 | 1/4" | 9/16" | 6" | 2-3/8" |
| T9608 | | | 8" | 4-3/8" |
| T9610 | | | 10" | 6-3/8" |
| T9612 | | | 12" | 8-3/8" |
| T9614 | | | 14" | 10-3/8" |

The specifications in this document are for reference only and subject to change without prior notice

# T9000: BRACKETS

## U-Shape Backplate Strut Bracket

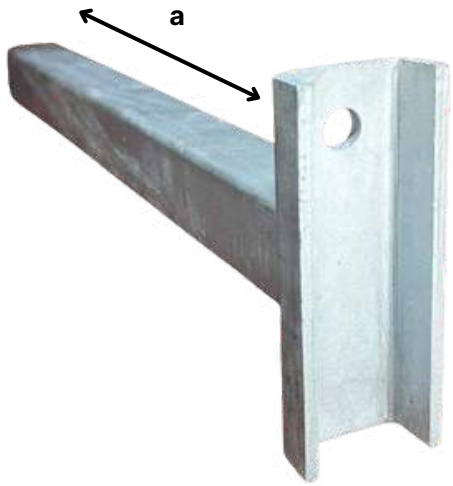


Photo shows “slot down”variation
T9718-A

| Part # | Plate Thickness | Hole Size | Length (a) | Design Load (Lbs)* |
|---|---|---|---|---|
| T9706 | 1/4" | 9/16" | 6" | 2150 |
| T9712 | | | 12" | 1900 |
| T9718 | | | 18" | 1200 |
| T9724 | | | 24" | 930 |

## Strut Brace

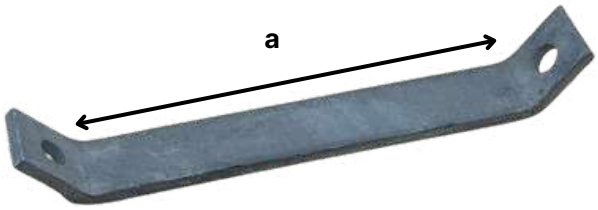


| Part # | Material Thickness | Hole Size | Length (a) | Design Load (Lbs)* |
|---|---|---|---|---|
| T9808 | 1/4" | 9/16" | 12" | 1020 |
| T9809 | | | 18" | 450 |
| T9810 | | | 24" | 250 |

4145 Lawson Line | Wallenstein, ON N0B 2S0
(519) 698-9856 | Sales@Technistrut.ca